ARKANSAS STATE BOARD OF HEALTH

RULES AND REGULATIONS PERTAINING TO ONSITE WASTEWATER SYSTEMS

Promulgated Under Authority of Ark. Code Ann. § 14-236-101 et seq.

Effective August 2019

Environmental Health Protection
Arkansas Department of Health
Nathaniel Smith, MD, MPH,
Director and State Health Officer

Table of Contents

SECTION 1	Authority and Purpose	3
SECTION 2	Definitions	3
SECTION 3	Variances and Exemptions	8
SECTION 4	Permitting Requirements	9
SECTION 5	Subdivision Requirements	12
SECTION 6	System Location	17
SECTION 7	Soil Criteria	18
SECTION 8	Standard Systems	22
SECTION 9	Alternate Systems	33
SECTION 10	Septic Tanks	37
SECTION 11	Secondary Treatment	41
SECTION 12	Onsite Wastewater Systems Monitoring Program	44
SECTION 13	Designated Representatives	45
SECTION 14	Installers	45
SECTION 15	Manufacturers	43
SECTION 16	Code of Ethics	43
SECTION 17	Penalties	43
SECTION 18	Severability	46
SECTION 19	Repeal	47
SECTION 20	Certification	47
APPENDIX A	Absorption Area Requirements	48
APPENDIX B	Quantities of Wastewater Flow for Various Types of Establishments	51
APPENDIX C	Minimum Capacity of Septic Tanks	54
APPENDIX D	Requirements for the Approval of Aerobic Treatment Units for Distribution in Arkansas	55
APPENDIX E	Requirements for Becoming an Aerobic Treatment Unit Distributor	56
APPENDIX F	Requirements for Submission Onsite Wastewater Systems Permit Application	57
APPENDIX G	Figures 1-11	67
APPENDIX H	Soil Textural Triangle	76
APPENDIX I	Red Soil Chart	77
APPENDIX J	Conversion Table	78

Section 1. Authority and Purpose

1.1. The following RULES AND REGULATIONS PERTAINING TO ONSITE WASTEWATER SYSTEMS are duly adopted and promulgated by the Arkansas State Board of Health pursuant to the authority expressly conferred by the laws of the State Arkansas including, without limitation, Act 96 of 1913 (A.C.A. 20-7-l09), and Act 402 of ~~l~~1977 (A.C.A. 14-236-101, et seq.).

1.2. Purpose: To establish minimum standards for the design and construction of onsite wastewater systems in suitable soils for the renovation of wastewater and the return of the renovated wastewater into the hydrologic cycle.

Section 2. Definitions

2.1. **Alternate System.** A non-standard individual onsite wastewater treatment or collection system approved by the Department in instances where a standard system is not suitable.

2.2. **Approved System.** An onsite wastewater system constructed and installed in accordance with the standards and requirements of this Regulation and for which a Permit for Operation has been issued. "Approved system" does not imply that the system will perform satisfactorily for a specific period of time, only that the system has met the minimum requirements of this Regulation.

2.3. **Authorized Agent.** The Environmental Health Specialist assigned to the County, or Business Unit by the Department.

2.4. **Bedrock.** Consolidated rocks that are sufficiently coherent when moist to make hand digging with a spade impractical, although it may be chipped or scraped. The bedrock may contain cracks that generally are too few and too small to allow roots to penetrate at intervals of less than 10 cm. The cracks may be coated or filled with clay or other material.

2.5. **Bedroom**. Any room inside a residence intended for the purposes of sleeping quarters.

2.6. **Benchmark.** A mark made on a stationary object of a determined position and elevation and used as a reference point.

2.7. **Community Wastewater System.** Any system, whether public or privately owned, serving 2 or more individual lots, for the collection, treatment and disposal of wastewater or industrial wastes of a liquid nature, including various devices for the treatment of such wastewater or industrial wastes.

2.8. **Department.** The Arkansas Department of Health.

2.9. **Designated Representative (DR).** A person certified by the Department to make percolation tests, system designs, and inspections subject to the Authorized Agent's final approval. Designated Representatives shall be registered professional engineers, registered land surveyors, licensed master plumbers, registered sanitarians or other similarly qualified individuals holding current certificates from the State of Arkansas, and shall demonstrate to the satisfaction of the Authorized Agent prior to their designation as a

"Designated Representative" their competency to make percolation tests, designs and final inspections for onsite wastewater systems in accordance with these Rules and Regulations and when authorized by the Authorized Agent.

2.9.1. Soil Qualified Designated Representative. A Designated Representative who has successfully passed the soils portion of the Designated Representative testing procedure, as set forth by the Department. These individuals are certified to size absorption areas based on depth to seasonal water tables.

2.10. **Distribution Box.** A watertight box that receives the discharge of effluent from the septic tank and distributes the flow of wastewater equally to each absorption trench.

2.11. **Distribution Device.** A device, approved by the Department, used to distribute or alternate the effluent load between two or more locations.

2.12. **Domestic Wastewater.** All wastes discharging from sanitary conveniences and plumbing fixtures of a domestic nature, exclusive of industrial and commercial wastes.

2.13. **Dosing Tank.** A tank constructed of concrete, plastic, fiberglass, or other authorized material that contains one or more pumps or automatic siphons designed to deliver a specified volume of wastewater effluent to the distribution system.

2.14. **Dwelling Unit.** A structure intended to be used as a residence. A single structure may contain more than one dwelling unit: e.g., a duplex contains two dwelling units.

2.15. **Emergency Repair.** The repair and/or replacement of any part of a malfunctioning onsite wastewater system, excluding the alteration of existing absorption trenches and/or the installation of additional absorption area, that poses an immediate health hazard.

2.16. **Engineering.** The engineering section of the Arkansas Department of Health.

2.17. **Experimental System.** A sewage treatment system that is not classified as a standard or an alternate onsite wastewater system. Experimental systems may be approved on a case-by-case basis and evaluated under the direction of the Department to determine the effectiveness of the system.

2.18. **High Strength Wastewater.** Wastewater, which exceeds the following parameters; biochemical oxygen demand (BOD_5), of 300 mg/L; total suspended solids (TSS) of 300 mg/L; fats, oils and grease content of 25 mg/L.

2.19. **High-use Area.** Any site accessible to the public for the purposes of entertainment, recreation, or gathering.

2.20. **High Water Mark.** The established maximum flood elevation of lakes with constructed dams, or when not available, the line which the water impresses on the soil by covering it for sufficient periods of time to deprive it of non-aquatic vegetation.

2.21. **Homeowner.** A person who owns and occupies a building as his home.

2.22. **Hydraulic Conductivity.** The proportionality factor in Darcy's Law, as applied to viscous flow of water in soil, that represents the ability of soil to conduct water and is equivalent to the flux of water per unit gradient of hydraulic potential.

2.23. **Industrial Wastes.** Liquid wastes resulting from the processes employed in industrial and commercial establishments.

2.24. **Installer.** Any person, firm, corporation, association, municipality, or governmental agency licensed by the department, which constructs, installs, alters, or repairs onsite wastewater systems for others.

2.25. **Interceptor Drain.** A subsurface drain line, usually constructed upgrade from the absorption area to divert seasonal groundwater.

2.26. **Lake.** A considerable body of inland water or an expanded portion of a river generally of appreciable size and too deep to permit vegetation, excluding subaqueous vegetation, to take root completely across the expanse of water.

2.27. **Licensees.** An encompassing term used to refer to persons licensed by the state to perform on-site related services to include Installers, Designated Representatives, Certified Monitoring Personnel, and Septic Tank Manufacturers.

2.28. **Monitoring Person.** An individual certified by the Department to conduct assessments under the Onsite Wastewater Systems Monitoring Program.

2.29. **Municipality.** A city, town, county, district, or other public body created by or pursuant to State law, or any combination thereof, acting cooperatively or jointly.

2.30. **Onsite Wastewater System.** A single system of treatment tanks and/or renovation facilities used for the treatment of domestic wastewater, exclusive of industrial wastes, serving only a single building, commercial facility such as an office building, or industrial plant or institution.

2.31. **Pedon.** The smallest volume for which one should describe and sample the soil to represent the nature and arrangement of its horizons and variability in the properties that are preserved in samples. In the usual situation, where all horizons are continuous and of nearly uniform thickness and composition, the pedon has a horizontal area of about 1 m^2.

2.32. **Perched Water Table**. A saturated zone, generally above the natural water table, as identified by redoximorphic features caused by a restrictive horizon.

2.33. **Person.** Any institution, public or private corporation, individual, partnership, or other entity.

2.34. **Piezometer.** A pipe placed in the soil, which gives the water pressure at depth. The reading is used to estimate the elevation of a water table.

2.35. **Pond.** A body of water smaller than a lake, often artificially formed.

2.36. **Potable Water.** Water free from impurities in amounts sufficient to cause disease or harmful physiological effects with the bacteriological and chemical quality conforming to applicable standards of the Arkansas State Board of Health.

2.37. **Primary Absorption Area.** The area approved by the Department or its Authorized Agent for the installation of an onsite wastewater system for a specified tract of land.

2.38. **Professional Soil Classifier (P.S.C.).** A person who by reason of their special knowledge of the physical, chemical, and biological sciences applicable to soils as natural bodies and of the methods and principles of soil classification as acquired by soils education and soil classification experience in the formation, morphology, description, and mapping of soils, is qualified to practice soil classifying, and who has been registered by the Arkansas State Board of Registration for Professional Soil Classifiers.

2.39. **Property Owner.** A person who owns and may or may not occupy the property.

2.40. **Property Owners' Association.** An association created by and pursuant to State law and organized for the purpose of maintaining common facilities including onsite wastewater facilities in unincorporated subdivisions.

2.41. **Redoximorphic Features.** Color patterns in a soil caused by loss (depletion) or gain (concentration) of pigment compared to the matrix color, formed by oxidation/reduction of Fe and/or Mn coupled with their removal, translocation, or accrual; or a soil matrix color controlled by the presence of Fe^{2+}.

2.42. **Relict Redoximorphic Features.** Soil morphological features that reflect past hydrologic conditions of saturation and anaerobiosis rather than contemporary hydrology. Redoximorphic features may not be considered relict unless they have been evaluated by a monitoring process as specified in Section 7.4.3.

2.43. **Residential Strength Effluent.** Effluent, which does not exceed the following parameters: biochemical oxygen demand (BOD_5) of 300 mg/L; total suspended solids (TSS) of 300 mg/L; fats, oils and grease content of 25 mg/L.

2.44. **Restrictive Soil Layer.** A soil layer that impedes the movement of water, air or growth of plant roots. Examples of such layers or conditions are claypans, fragipans, pressure or induced pans , and bedrock.

2.44.1. **Claypan.** A natural subsurface horizon with low hydraulic conductivity and at least 20% more clay than the overlying horizon.

2.44.2. **Fragipan.** A natural subsurface horizon with very low organic matter, high bulk density and/or high mechanical strength relative to overlying and underlying horizons; has hard or very hard consistence when dry, but showing a moderate to weak brittleness when moist. The layer typically has redoximorphic features, is slowly or very slowly permeable to water, is considered to be root restricting, and usually has few to many bleached, roughly vertical planes which are faces of coarse or very coarse polyhedrons or prisms.

2.44.3. **Pressure or Induced Pan.** A subsurface horizon or soil layer having a higher bulk density and a lower total porosity than the soil directly above or below it, as a result of pressure that has been applied by normal tillage operations or by other artificial means. Frequently referred to as a plow pan, plow sole, or traffic pan.

2.45. **Scum.** The accumulated floating material, including grease, oils and other low-density solids in a septic tank.

2.46. **Secondary Absorption Area.** A location indicated on a lot or plot plan showing where the absorption area is to be placed in the event of failure or necessary replacement of the system located on the primary absorption area.

2.47. **Seasonal Water Table (SWT).** A zone of soil that become saturated for periods long enough to undergo reducing conditions during periods of climatic stress due to an underlying restrictive layer. The seasonal water table may be classified as brief, moderate, or long. May also be known as a perched water table.

2.48. **Septic Tank.** A single tank or series of tanks that receive raw domestic wastewater and serve as the primary treatment unit in an onsite wastewater system. The septic tank provides skimming and storage of scum, settling and storage of the wastewater solids, and the partial digestion of accumulated solids by anaerobic action. Clarified effluent then flows from the septic tank to the absorption area or for further treatment.

2.49. **Septic Tank Manufacturer.** A person, firm, corporation or association who manufactures septic tanks, package treatment units or other components for onsite wastewater systems.

2.50. **Similarly Qualified Individual.** A bachelor's degree with 30 hours of natural science, engineering and/or math, or 3 years' experience verified by the Department in the design of onsite wastewater systems.

2.51. **Sludge.** The accumulated solids that have settled to the bottom of a septic tank.

2.52. **Soil.** A natural body comprised of solids (minerals and organic matter), liquid, and gases that occurs on the land surface, occupies space, and is characterized by one or both of the following: horizons, or layers, that are distinguishable from the initial material as a result of additions, losses, transfers, and transformations of energy and matter or the ability to support rooted plants in a natural environment.

2.53. **Soil Absorption System.** The system for the final renovation of the septic tank effluent and return of the renovated wastewater to the hydrologic cycle, including the lateral lines, the perforated pipes, the rock or other authorized conventional trench media products and the soil absorption trenches.

2.54. **Soil Horizon.** A layer approximately parallel to the surface of the soil distinguishable from adjacent layers by a distinctive set of properties produced by the soil forming process.

2.55. **Soil Pit.** An onsite excavation. The excavation shall be of adequate size to observe depth to seasonal water tables, bedrock, or impervious layers. The soil pit is a minimum of 2 feet in width, and dug to provide ease of access such as steps or a moderate slope. The excavation shall be 4 feet in depth unless an impervious layer is encountered and shall

provide an exposed sidewall area of at least 3 feet in length. It is used to observe those soil characteristics relevant in determining soil suitability for wastewater absorption and renovation.

2.56. **Soil Textural Class.** The relative proportions by weight of the three mineral fractions sand, silt, and clay as defined by the USDA soil texture classifications. See Page 76 Soil Texture Triangle

2.57. **Standard Systems.** A standard onsite wastewater system consists of a field of perforated pipe surrounded by gravel, or other conventional trench media product authorized by the Department and installed in such a manner that the clarified effluent from the septic tank or pretreatment unit will be distributed with reasonable uniformity into the natural soil using loading rates found in Table 1.

2.58. **Stream.** A year-round flowing stream as designated by the United States Geological Survey.

2.59. **Subdivision.** Land divided or proposed to be divided for predominantly residential purposes into such parcels as required by local ordinances, or, in the absence of local ordinances, subdivision means any land which is divided or proposed to be divided by a common owner or owners for predominantly residential purposes into 3 or more lots or parcels, platted or unplatted units any of which contains less than three acres, as a part of a uniform plan of development.

2.60. **Surface Discharging System.** A system that applies secondary treated effluent directly to the soil surface from a single point of discharge.

2.61. **True Water Table.** The upper surface of a saturated zone within the soil that is directly connected to a regional aquifer.

2.62. **Undisturbed Soil.** Soil, which has developed, by the actions of the soil forming processes and which has not been disturbed or altered by the human activities. Exception: plow layers less than 7 inches from the soil surface.

2.63. **Valid Permit.** A permit for construction is valid for a period of one year from the date of approval. A permit may be deemed invalid by the Authorized Agent before construction if the site and/or soil conditions have changed after approval or the information on the permit is inaccurate. A permit may be re-validated.

2.64. **Wet Season.** The period within a year when rainfall normally exceeds evapotranspiration and a seasonal water table can be expected to be at its highest level in the soil.

Section 3. Variances and Exemptions

3.1. Requested variations from these Rules and Regulations will be considered and may be approved at the sole discretion of the Department.

3.2. Submission of proposed experimental onsite wastewater systems may be approved, disapproved, or approved on a trial basis for a specific period of time. Such approval or disapproval shall be at the sole discretion of the Department. Submission of an experimental design shall include design data as to the efficiency of operation of the proposed experimental system. A monitoring plan shall be submitted for approval in addition to the system design.

3.3. Good management practices. Good management practices are additions or modifications to systems which will make such systems more efficient, or which could make such systems acceptable in certain soil conditions. Where good management practices are proposed for inclusion in a soil absorption system, approval shall be at the discretion of the Department or its Authorized Agent.

3.4. Existing installation. No onsite wastewater system in existence on the effective date of these Rules and Regulations nor any onsite wastewater system installed after the effective date of these Rules and Regulations in a subdivision, wherein individual lots have been developed or sold for use with onsite wastewater systems for which a plat has been filed on record prior to the effective date of these Rules and Regulations shall be required to conform to more stringent specifications and requirements as to design, construction, density of improvements, lot size, and installation than those standards contained in any applicable duly adopted and published regulations in effect at the time of platting of record of such subdivisions. No onsite wastewater system to be installed on a residential lot for which the Department or its Authorized Agent has issued a construction permit on or before the effective date of these Rules and Regulations shall be required to conform to the design, construction and installation provisions of these Rules and Regulations. In a subdivision for which a master plan has been approved by the Department prior to the effective date of these Rules and Regulations, or for which the Department has otherwise previously issued its written approval for the installation of onsite wastewater systems and where individual lots have been developed or sold in reliance upon such prior written approval, onsite wastewater systems shall not be required to conform to more stringent specifications as to design, construction and installation than those standards in effect at the time of, or referred to, in such prior written approval. However, it is provided, that any onsite wastewater system which is determined by the Department to be a health hazard or which constitutes a nuisance due to odor or unsightly appearance shall conform to the provisions of these Rules and Regulations within 30 working days after notification that such determination has been made.

Section 4. Permitting Requirements

4.1. All premises shall be connected to a sanitary sewer when within 300 feet from the point where the sewer exits a building on the property owner's property and available to said premises when connection can be made without crossing another person's property. No privies, onsite wastewater systems or other receptacles for human excreta shall be constructed, maintained, or used on the premises. Plumbing shall be installed and maintained in accordance with the ARKANSAS STATE PLUMBING CODE (see Ark. Code Ann. §§ 17-38-101 et. seq.).

4.2. All lots, tracts, or parcels shall have suitable primary and secondary absorption areas that utilize standard onsite wastewater systems sized according to natural soil data. In no case

shall a wastewater system utilizing subsurface renovation be approved regardless of lot size if soils are not suitable for subsurface renovation.

4.3. A completed Onsite Wastewater System Permit Application and detailed plans and specifications following the requirements found in Appendix F for the collection, treatment and/or renovation facilities for all wastes of a domestic nature, containing a predominance of human excreta and exclusive of industrial wastes shall be submitted to and receive the approval of the Arkansas Department of Health or its Authorized Agent, prior to construction of a building or residence.

4.4. Onsite wastewater systems in subdivisions or in platted or unplatted lots or tracts of land as provided in Act 402 of l977 (A.C.A. 14-236-101, et seq.), shall be planned, designed and constructed in accordance with the RULES AND REGULATIONS PERTAINING TO GENERAL SANITATION and the RULES AND REGULATIONS PERTAINING TO ONSITE WASTEWATER SYSTEMS of the Arkansas Department of Health. Permits for construction and operation of onsite wastewater systems shall be obtained in accordance with the RULES AND REGULATIONS PERTAINING TO ONSITE WASTEWATER SYSTEMS prior to the construction, installation or modification of the Onsite Wastewater System.

4.5. Permit requirement. It shall be unlawful for any person, firm, corporation, association, municipality, or governmental agency to begin construction, alteration, repair, or extension of any onsite wastewater system, owned by any other person, firm, corporation, association, municipality or governmental agency until the owner first obtains a valid Permit for Construction issued by the Department or its Authorized Agent.

4.6. It shall be unlawful for any person, firm, corporation, association, municipality or governmental agency to begin operation of any onsite wastewater system until such system has been inspected and approved by the Department or its Authorized Agent and the owner has first obtained a Permit for Operation issued by the Department or its Authorized Agent.

4.7. It shall be unlawful for any installer to begin construction, alteration, repair or extension of any onsite wastewater system owned by any other person, firm, corporation, association, municipality or governmental agency until the permit holder or installer first notifies the Authorized Agent a minimum of 24 hours prior to the date he/she plans to begin work on said system. Emergency repairs may be undertaken without prior notification to the Authorized Agent provided a permit is obtained within ten working days.

4.8. For those cities or counties with Authorized Agents, the Authorized Agent shall be the Authorized Agent of the Department. In the event that an Authorized Agent has not been designated for a city or county, applications for onsite wastewater systems shall be made to the Department. Application forms and instructions may be obtained from the Authorized Agent or from the Department.

4.9. Plan review fee. A fee shall be levied for the review of each permit. Permit fees shall be made payable to the Department. The review fee shall be paid before the issuance of Part 1 of the Permit Application. There shall be no refund of the fee or any part thereof due to failure to proceed under the Permit Application. Construction shall begin within one year of issuance or the permit shall be re-validated by the original submitting Designated Representative or the Department's Authorized Agent.

4.9.1. A fee shall be levied for the review of Individual Onsite Wastewater Permit Applications as follows:

4.9.1.1. For structures one thousand five hundred square feet (1,500 sq. ft.) or less, the fee to review a permit application is thirty dollars ($30.00);

4.9.1.2. For structures more than one thousand five hundred square feet (1,500 sq. ft.) and up to two thousand square feet (2,000 sq. ft.), the fee to review a permit application is forty-five dollars ($45.00);

4.9.1.3. For structures more than two thousand square feet (2,000 sq. ft.) and up to three thousand square feet (3,000 sq. ft.), the fee to review a permit application is ninety dollars ($90.00);

4.9.1.4. For structures more than three thousand square feet (3,000 sq. ft.) and up to four thousand square feet (4,000 sq. ft.), the fee to review a permit application is one hundred twenty dollars ($120.00);

4.9.1.5. For structures more than four thousand square feet (4,000 sq. ft.), the fee to review a permit application is one hundred fifty dollars ($150.00);

4.9.1.6. For the alteration, repair, or extension of any individual sewage disposal system, the fee to review a permit application is thirty dollars ($30.00).

4.9.2. In calculating the square footage of a residential structure for purposes of determining the applicable fee under this section, the square footage of all auxiliary areas of the residential structure shall not be considered.

4.9.2.1. Auxiliary areas include garages, carports, porches, and other similar areas as determined by the Division of Environmental Health Protection of the Department of Health.

4.10. Permit Procedure

4.10.1. Part I of the Permit is the Permit for Construction. Part I of the Permit Application form shall be completed by a Designated Representative and approved by the Department or its Authorized Agent prior to initiating construction. The information to be reported in this portion includes the results of the percolation test, soil determination results, lot dimensions, system design, system layout and other information required by the Department or its Authorized Agent. NO CHANGES OR ALTERATIONS MAY BE MADE TO THE SYSTEM PRIOR TO OR DURING CONSTRUCTION WITHOUT PRIOR APPROVAL OF THE AUTHORIZED AGENT.

4.10.2. Part II of the Permit Application is the installation inspection. An installation inspection may be made during the construction of any onsite wastewater system. The inspection may be made during any phase of the installation.

4.10.2.1. It shall be the duty of the installer to notify the Authorized Agent or Designated Representative, when the installation is ready for inspection. It shall be the duty of the owner or occupant of the property to give the Department, its Authorized

Agent, or Designated Representative, free access to the property at reasonable times for the purpose of making the installation inspection. Within five (5) days, the installer shall submit the required documentation to the local health unit that the system has been installed pursuant to the approved permit.

4.10.2.2. The inspection may be made by the Authorized Agent, or may be made by the Designated Representative at the approval of the Authorized Agent.

4.10.2.3. Any person aggrieved by the disapproval of an onsite wastewater system installation shall be afforded review as provided in Act 434 of 1967, the ARKANSAS ADMINISTRATIVE PROCEDURE ACT.

4.10.3. Part III of the Permit is the Permit for Operation. After approval of the inspection, the Authorized Agent will approve and issue a Permit for Operation. The system shall not be used until the Permit for Operation is issued. The Authorized Agent will retain the original and return the remaining copies to the owner.

4.10.4. Refusal of permit. Except as provided in Section 3.4, a Permit for the construction, alteration, repair, extension, or operation of an onsite wastewater system or alternate/experimental system shall be refused where public sewer systems are reasonably available or economically feasible, or in instances where the issuance of such Permit is in conflict with the other applicable laws and regulations or where the issuance of such permit is in conflict with the public policy declared in Act 402 of l977 (A.C.A. 14-236-101, et seq.), except that emergency repairs may be undertaken without prior issuance of a Permit, provided a Permit is subsequently obtained within 10 working days after the repairs are made.

Section 5. Subdivisions

5.1. Subdivision Review

5.1.1. All subdivision plans, which are proposed to utilize standard onsite wastewater systems as a method of wastewater treatment for all or part of the lots or tracts in said subdivision, shall be submitted to the Arkansas Department of Health for review and approval of the overall plan for the utilization of onsite wastewater systems. Any lots or parcels within the boundaries of the proposed subdivision, which are found to be unsuitable for standard onsite systems, shall be incorporated into surrounding lots or parcels. Areas designated as green or community space shall be clearly identified and will not be assigned a lot number or considered in the approval of the subdivision.

5.1.2. Submission shall be made to the local health unit and shall include data on soil pits, percolation tests (if applicable), respective test location, topography, and such other information as may be required for the review. The Department will establish guidelines on subdivision plan submission and review policies. These guidelines will be updated periodically as necessary.

5.1.3. The plan review fee will be a minimum of one hundred ($100.00) for one (1) lot and twenty-five dollars ($25.00) for each following lot, with a maximum of one thousand five hundred dollars ($1,500).

5.1.4. The following items will be included in all subdivision plans:

5.1.4.1. Vicinity map and legal description indicating the location of the subdivision.

5.1.4.2. Layout of lot boundaries, streets, easements, all topographical features, and flood level of the area.

5.1.4.3. The corners of both the primary and secondary absorption areas shall be sized and flagged on each lot and indicated on the plans.

5.1.4.4. Contour lines at 5 to 20 feet intervals shall be shown as relating to lot boundaries and the location of tests performed.

5.1.4.5. Subdivision with wells will show proposed well location for each lot.

5.1.4.6. Features that may affect the location of the standard onsite wastewater systems should be identified. These include but are not limited to streams, existing wells, pipelines (oil, gas or water), power lines, and topographic features.

5.1.4.7. All lots will be designed for three-bedroom residences unless otherwise indicated.

5.1.4.8. Subdivisions with Public Water Facilities require detailed engineering plans and specification for the water systems submitted by an engineer licensed in the State of Arkansas to the Engineering Section of the Arkansas Department of Health.

5.1.4.9. Addresses of all parties to receive copies of the subdivision plans.

5.1.4.10. Three (3) copies of the plans are required.

5.1.4.11. Flood zone determination (FEMA Flood Zone Map).

5.2. If an individual water well supply and an onsite wastewater system are proposed, the lot size shall be such that the well shall be located at least 50 feet from any lot line, and at least 100 feet from any part of the onsite wastewater system proposed on the same lot and onsite wastewater systems proposed on any adjacent lots. Wells should be located up slope from wastewater systems if possible. Both primary and secondary onsite wastewater systems shall conform to all set back requirements established under Section 6.2 of this regulation.

5.3. If a public water supply is proposed and an onsite wastewater system is to be used, the lot size shall be such that a primary absorption area and a secondary absorption area are present. Both absorption areas shall conform to the setback requirements outlined in Section 6.2 of this regulation.

5.4. No surface discharging systems shall be allowed in subdivisions.

5.5. Primary and secondary absorption areas in a subdivision shall be sized according to natural soil conditions for standard onsite wastewater systems using loading rates found in Table 1. Capping fill may be used to overcome separation to bedrock; however, no reduction in loading rate shall be granted for the purpose of determining minimum lot size. Interceptor drains may be used as a good management practice, however, no reduction in the loading rate shall be granted for determining minimum lot size. On lots less than three acres in size proposed for subdivision development, all undisturbed soils shall have a minimum depth of

13 inches or greater to a brief seasonal water table, and/or a depth of 18 inches or greater to an adjusted moderate seasonal water table, and/or a depth of 24 inches or greater to an adjusted long seasonal water table. Lots that do not meet the above minimum soil criteria shall be three acres or larger and sized on natural soil conditions. Good management practices shall not be used for the purpose of determining minimum lot size.

5.5.1. Submission shall be made to the local health unit utilizing one of the following approved methods:

5.5.2. Subdivision Review and Soil Mapping

5.5.2.1. When utilizing soil mapping for subdivision review, the soil map shall be submitted by a Professional Soil Classifier. When soil mapping a subdivision for the purpose of designing standard onsite wastewater systems, a high intensity map is required. A high intensity map details the location and extent of the soils and landscape features sufficiently for site evaluation for subsurface wastewater renovation. The final report consists of a soils map and a soils report.

5.5.2.2. Field procedures for Mapping Subdivisions

5.5.2.2.1. Soil maps for subdivisions are to be made from a maximum grid of 100 feet. Grid points shall be accurately located and identified using flags or stakes. A soil pit shall be located at each grid point and identified with the corresponding flag or stake. The maximum distance allowed from a property line to an outside perimeter grid line is 50 feet.

5.5.2.2.2. The corners of both the proposed primary and secondary absorption areas shall be sized and flagged on each lot.

5.5.2.2.3. A soil description shall be made from each soil pit in accordance with the standards established by the National Cooperative Soil Survey.

5.5.2.3. The Soil Map

5.5.2.3.1. The soil map should be compiled at a scale of 1 inch = 100 feet (1: 1,200).

5.5.2.3.2. The soil map shall show all map units. A map unit is a collection of similar soils defined and named the same in terms of their properties. Each map unit differs in some respect from all others and is uniquely identified on a soil map. Each individual area on the map is delineation. Areas of similar soils consisting of 625 square feet or more shall be delineated. Areas of contrasting soils consisting of less than 625 square feet are inclusions and shall be identified in the map unit description. Soil map units are to be named by their numerical ranking with respect to the soil loading rates designated for each map unit. Example: The unit with the highest loading rate for subsurface wastewater renovation will be named Map Unit 1.

5.5.2.3.3. Soil properties critical for sizing of onsite system absorption areas within each map unit shall be given in tabular or narrative form on the soil map or

in the soil report. These properties include maximum slope, depth to bedrock, hydraulic conductivity within the depth zone extending 6 inches above and 12 inches below the planned depth of the base of the absorption trench, minimum depth to the brief, moderate, and long seasonal water table, if present, and minimum loading rate based on these properties.

5.5.2.3.4. When a soil pit is not located within the absorption areas, the primary and secondary absorption areas will be sized according to the limiting loading rate within the applicable map unit. Within a map unit, the absorption areas can be moved outside the designated primary and secondary areas without additional soils information by utilizing the most limiting loading rate or further soil evaluation in the specific area being proposed shall be conducted.

5.5.2.3.5. The map unit legend must identify all symbols used on the soil map.

5.5.2.3.6. A signed statement shall be on the soil map certifying the map was made in accordance with the current National Cooperative Soil Survey Standards by a Registered Professional Soil Classifier Licensed in Arkansas.

5.5.2.3.7. The following statement shall be on all soil maps: Any modification such as cutting, filling or compaction of the soil may change the nature of the soils, and may alter the suitability of the soils for the intended use and will therefore void the soil map.

5.5.2.4. The Soil Report

5.5.2.4.1. The soil report is a separate document that shall be submitted as an attachment to the soil map. The report shall consist of the following:

5.5.2.4.2. Each map unit identified on the soil map shall have a typical pedon description. Terms used in the description shall be those used by the National Cooperative Soil Survey.

5.5.2.4.3. The range in characteristics for each soil map unit shall be given. The characteristics shall include but are not limited to color, texture, depth, and type of redoximorphic features, and depth to bedrock. Ranges should be narrow enough that interpretations will not be different for soils with the same typical pedon.

Commented [LTW1]: Range or minimum? If depth to redox feature is different, interpretation will be different.

5.5.2.4.4. Interpretations for each typical pedon shall be included in the soil report. The minimum interpretations required include seasonal water table duration, hydraulic conductivity classes, depth to bedrock, and the range of soil loading rate.

Commented [LTW2]: If single "typical" pedon, should not be a range of soil loading rate.

5.5.2.4.5. A signed statement shall be on the soil report certifying the report was made in accordance with the current National Cooperative Soil Survey Standards by a Registered Professional Soil Classifier.

5.5.2.5. Sizing based on Seasonal Water Table loading rates without Soil Mapping

5.5.2.6. Designated Representatives utilizing soil morphology method shall be soil certified. The following information or items shall be included:

5.5.2.7. A minimum of one soil pit in both the primary absorption and secondary absorption area is required. Soil pit information shall include depth to bedrock, minimum hydraulic conductivity within the zone extending 6 inches above and 12 inches below the designed depth of the absorption trench, depth, and type of restrictive soil layers, and depth to brief, moderate, and long seasonal water tables.

5.5.2.8. Loading rates based on the soil properties used to size primary and secondary sites shall be given.

5.5.2.9. The corners of both the proposed primary and secondary absorption areas shall be sized and flagged on each lot.

5.5.3. Construction of any type shall not begin upon any lot in the subdivision until final approval of the submission for utilization of onsite wastewater systems within the subdivision has been made by the Department.

5.5.4. Property Owners' Associations that construct and maintain or have constructed and maintained wastewater treatment facilities in accordance with standards and regulations established by the Arkansas Department of Health or the Arkansas Department of Environmental Quality and that desire to exercise general supervision and authority over the treatment of wastewater within and for the subdivided area over which their authority extends, may request the Department or in the case of onsite wastewater systems, or Engineering, in the case of community wastewater treatment systems, to delegate such parts of its authority as the Property Owners' Association wishes to exercise. The Department may, at its discretion, delegate any of its authority in the administration of these Rules and Regulations as it shall deem proper and in accordance with the following:

5.5.4.1. In the event that such Property Owners' Association constructs and maintains all onsite wastewater systems within the subdivided area over which their authority extends, the Department, after determining by the procedure set forth in Section 5 that the use of the onsite wastewater systems within the subdivision is acceptable, may, at its discretion, delegate the Property Owners' Association general supervision and authority over the location, design, construction, installation and operation of onsite wastewater systems subject, however, to compliance with these Rules and Regulations and to the use of the permit forms established under these Rules and Regulations and to the final approval of each permit by the Authorized Agent of the Department.

5.5.4.2. In the event that such Property Owners' Association constructs and maintains all community wastewater treatment systems within the subdivided area over which their authority extends, Engineering may, at its discretion, delegate general supervision and authority over the location, design, construction, installation, and operation of such community wastewater treatment systems subject to compliance with applicable Rules and Regulations of the Department

of Health and of the Arkansas Department of Environmental Quality, and subject to final approval of designs and issuance of permits as required by said applicable Rules and Regulations. Such compliance shall be to the same degree and extent as would apply if the Property Owners Association were a municipality.

Section 6. System Location

6.1. Minimum horizontal distances shall be used only where ideal conditions indicate them to be sufficient and greater distances shall be required where local conditions demand, as found in Section 6.2. Waivers except with public water supplies involved shall be submitted to and approved by the Department. Waivers affecting public water supplies shall be submitted to and approved by Engineering. Details pertaining to local water wells, such as depth, type of construction, vertical zone of influence, together with data on the geological formations and porosity of subsoil strata, should be considered in determining the safe allowable distance between wells and onsite wastewater systems.

6.2. Minimum Horizontal Distances.

6.2.1. Facilities used for the collection, treatment, and renovation of wastewater shall be at least 300 feet from the high-water mark of any body of water, if within one quarter mile of a public water supply intake on that body of water.

6.2.2. Facilities used for the collection, treatment, and renovation of wastewater shall be at least 300 feet from any spring used as a public water supply.

6.2.3. Facilities used for the collection, treatment, and renovation of wastewater shall be at least 100 feet from any source of domestic water supply.

6.2.4. Facilities used for the collection, treatment, and renovation of wastewater shall be at least 100 feet from the high-water mark of any stream or lake.

6.2.5. Facilities used for the collection, treatment, and renovation of wastewater shall be at least 50 feet from any pond on the same property and at least 100 feet from any pond on adjacent properties, if in the pond watershed. In no case shall the minimum separation distance from any pond be less than fifty feet.

6.2.6. Facilities used for the collection, treatment, and renovation of wastewater shall be at least 10 feet from any dwelling or building.

6.2.7. Facilities used for the collection, treatment, and renovation of wastewater shall be at least 10 feet from all property lines.

6.2.8. Facilities used for the collection, treatment, and renovation of wastewater shall be at least 10 feet from any water service line (See Arkansas Plumbing Code).

6.2.9. Facilities used for the collection, treatment, and renovation of wastewater shall be at least 100 feet from any sinkhole.

Section 7. Soil Criteria

7.1. The first step in the design of any onsite wastewater system is to determine the suitability of the soil. A minimum of two soil pits is required to determine the suitability of a site. One pit shall be in the area of the proposed primary absorption area and one pit shall be in the area of the proposed secondary absorption area. The soil pits shall be left open for use by the Authorized Agent. Depths to seasonal water tables, bedrock (if encountered), and the type and depth of the various soil layers including both pervious and impervious strata and their relationship with the proposed soil absorption system's other impervious strata shall be reported. No soil absorption system shall be installed in fill material.

7.2. Soil Separation Distances

The following are minimum separation distances from the bottom of the proposed absorption trench to the true water table (aquifer) and bedrock. These conditions shall be met before the soil is considered suitable for subsurface renovation.

7.2.1. True Water Tables

Minimum hydraulic conductivity in depth zone extending 6 inches above and 12 inches below planned depth to base of soil absorption trench:

Low or Moderate Hydraulic Conductivity	24 inches
High Hydraulic Conductivity	36 inches

7.2.2. Bedrock

Minimum hydraulic conductivity in depth zone extending 6 inches above and 12 inches below planned depth to base of soil absorption trench:

Low or Moderate Hydraulic Conductivity with redoximorphic features indicating SWT of moderate duration or longer	18 inches
Low or Moderate Hydraulic Conductivity with no redoximorphic features or redoximorphic features indicating a brief SWT	24 inches
High Hydraulic Conductivity	36 inches

7.3. Hydraulic Conductivity Classes

Hydraulic conductivity class shall be assigned based on the soil horizon with the minimum hydraulic conductivity in depth zone extending 6 inches above and 12 inches below planned depth to base of soil absorption trench. The hydraulic conductivity class may be determined using the following:

7.3.1. High hydraulic conductivity**.** Natural soil horizons which have not been compacted by human activities, especially vehicle traffic and tillage operations, and are in the following particle size classes:

7.3.1.1. Sandy. The texture of the fine earth fraction (<2 millimeters diameter particles) is sand or loamy sand but not loamy very fine sand; rock fragments comprise less than 35% of the horizon volume.

7.3.1.2. Fragmental. Rock fragments (stones, cobbles, gravel, and very coarse sand particles) comprise 90% or more of the horizon volume; too little fine earth to fill some of the interstices larger than 1 millimeter.

7.3.1.3. Sandy-Skeletal. Rock fragments 2 millimeters in diameter or larger make up 35% or more but less than 90% of the horizon volume; enough fine earth to fill interstices larger than 1 millimeter; the fine earth fraction is sandy as defined for the sandy particle size class.

7.3.2. Moderate hydraulic conductivity. Natural soil horizons which clearly have some soil structure other than platy, which have not been compacted by human activities, especially vehicle traffic and tillage operations, and which have one of the following textural classes: sandy loam, loam, silt loam, silt, sandy clay loam, clay loam, or silty clay loam; rock fragment content is less than 90%.

7.3.2.1. Soils with sandy clay, clay, or silty clay texture and are low shrink-swell will be considered to have moderate hydraulic conductivity. These residual soils have a hue of 5YR or redder and have typically formed over limestone and chert parent materials associated with the Ozark Highlands in northern Arkansas. Alluvial soils such as those deposited by the Arkansas and Red Rivers and red soils formed from other types of parent materials and/or in other parts of the State are not included in this exception. See Appendix I for additional guidance for identification of soils meeting these criteria.

.

7.3.3. Low hydraulic conductivity (40% – 60% clay)**.** Included are soil horizons which have platy structure or are massive, and horizons which have been compacted by human activities, especially vehicle traffic and tillage operations. Also included are horizons with one of the following textural classes: sandy clay, clay, and silty clay; rock fragment content is less than 90%.

7.3.4. Red Soil Chart (See Appendix I)

7.3.5. No loading rates are available for low hydraulic conductivity soils with greater than 60% clay.

.

7.4. Seasonal Water Table (SWT) Classes

The depth to seasonal water tables of 3 durations can be determined from the following guides. The guides are interpretations of the type of redoximorphic features present in a horizon. Each horizon should be placed in the most limiting SWT class for which the criteria are met. All colors are for moist conditions.

The placing of soil horizons into SWT classes based on redoximorphic features is an interpretation and requires some understanding of soil development processes. Redoximorphic features are not expected to occur unless the horizon has been both saturated and anoxic conditions have led to reduction of iron and manganese. Reduction of iron and manganese is not expected to occur until after the horizon has been saturated for a few days or weeks and the saturation has been periodic or continuous for a substantial period of time (decades or centuries).

7.4.1.1. Brief. Soil horizons which have seasonal water tables of brief duration contain one or more of the following:

Concentrations or depletions with chroma ≥3: less than 20% of the mass is chroma 3 depletions.

2% or more black (manganese) masses.

7.4.1.2. Moderate**.** Soil horizons which have seasonal water tables of moderate duration contain one or more of the following:

Depletions with chroma ≤2 comprise less than 50% of the mass.

Chroma 3 depletions comprise more than 20% of the mass.

7.4.1.3. Long**.** Soil horizons which have seasonal water tables of long duration contain the following:

Chroma ≤2 in 50% or more of the mass.

7.4.2. Soil horizons that have chroma and value of ≤ 3 due to high organic matter contents (A horizons) present problems for SWT interpretations. Also, with low chroma comprised of uncoated grains which result from prolonged leaching with organic acids (E horizons) are not considered to be an indication of a SWT. These horizons (A and E) shall be considered to contain SWT's only if they also contain identifiable redox concentrations and/or depletions. A plowed horizon (Ap), which has chroma of 3 or less, shall not be considered to contain an SWT unless the first underlying horizon contains an SWT. The duration of the SWT in a plowed horizon (Ap) with chroma ≤ 3 and in A and E horizons with chroma ≤ 3 and redox concentrations and/or depletions shall be the same as in the first underlying horizon.

7.4.3. Monitoring Requirements

7.4.3.1. Some soils may exhibit redoximorphic features that are not indicative of current soil conditions. In such soils, monitoring wells or piezometers may be necessary to determine current soil wetness conditions. Monitoring shall be done during the wet season.

7.4.3.2. A property owner or their representative has the option to use observation wells and/or piezometers to demonstrate that redoximorphic features are not an indication of zones of saturation. The following procedures for the use of observations wells/piezometers to evaluate the depth and duration of seasonal water tables shall be implemented.

7.4.3.3. The property owner or their representative shall notify the Department, in writing, of the intent to use observation wells and/or piezometers to evaluate depth and duration of seasonal water tables.

7.4.3.4. On individual lots, at least one (1) observation well and/or piezometer shall be installed and monitored on a site within both the proposed primary and secondary absorption areas. If in the judgment of the Department, more than one (1) is needed, the property owner or their representative shall be notified. For subdivision evaluation, at least one (1) observation well and/or piezometer shall be installed in each soil mapping unit. However, a minimum of one (1) observation well and/or piezometer per acre is required.

7.4.3.5. The wells and/or piezometers shall extend at least 36 inches into the natural soil. The Department reserves the right to determine the depth of all wells and/or piezometers. In soils with a fragipan, the observation well and/or piezometer shall not be installed deeper than the top of the fragipan.

7.4.3.6. All plans and specifications for observation wells/piezometers shall be submitted and installed under the supervision of a Professional Soil Classifier.

7.4.3.7. Monitoring of seasonal water tables shall be conducted by a Professional Soil Classifier or Designated Representative.

7.4.3.8. Under no circumstances will the property owner/developer be allowed to monitor the water levels.

7.4.3.9. The monitoring period shall be during the wet season (December 1st through May 15th of the following year) to verify the depth and duration of the seasonal water tables. Monthly precipitation during the monitoring period should be near the long-term (30 year) average. The Department may not accept data from the monitoring period if the deviation from average is substantial. Several methods are available to document deviation of monthly and seasonal precipitation from average conditions. Precipitation data used should be from the nearest weather station. The monitoring period shall be 8 consecutive weeks and 2 non consecutive days per week. A minimum of 16 recorded observations shall be conducted.

Commented [A3]: Explain

7.4.3.10. At its discretion, the Department shall field check the monitoring periodically during the time of expected saturated soil conditions.

7.4.3.11. The Department may, at any time during the observation period, verify the observed water depth by conducting a soil boring next to, and of equal depth with, any of the observation wells/piezometers. The well may be declared invalid by the Department if the water level after 24 hours without precipitation, presents a discrepancy with the observed water level in the data collected. The owner will be notified by the Department of such findings.

7.4.3.12. When monitoring determines that the site is suitable, the Department will request that a new site evaluation be submitted. The monitoring information shall be incorporated into the new site evaluation.

7.4.3.13. Some soils have been extensively studied and have no contemporary seasonal water tables. These specific areas may be exempted from the soil redoximorphic features but shall be sized by hydraulic conductivity or percolation rates.

7.4.4. Lowering Seasonal Water Tables

7.4.4.1. Interceptor Drains. Interceptor drains can be utilized to lower the brief seasonal water table to a maximum depth of 18 inches in soils less than 30% clay on sites with 3% or more slope. No reduction is allowed in the moderate seasonal water table.

7.4.4.2. Capping Fill. The depth of the observed seasonal water table may be increased by a factor equal to half the depth of the settled fill up to a maximum adjustment of 7 inches. Capping fills are outlined in Section 8.7 of this regulation. Systems incorporating capping fills shall be designed to load to the surface of the settled cap in order to utilize the adjustment credited for the applied cap.

7.5. On lots less than 3 acres, prior to adjustment for capping fill, where the slope is less than or equal to 12%, all undisturbed soils exhibiting a depth of 13 inches or greater to a brief seasonal water table, and/or a depth of 18 inches or greater to an adjusted moderate seasonal water table, and/or a depth of 24 inches or greater to an adjusted long seasonal water table shall utilize a standard onsite wastewater systems as outlined in this regulation.

7.6. On lots of 3 acres or greater, prior to adjustment for the capping fill, all undisturbed soils exhibiting a depth of 12 inches or greater to a brief seasonal water table, and/or a depth of 16 inches or greater to an adjusted moderate seasonal water table, and/or a depth of 20 inches or greater to an adjusted long seasonal water table, shall utilize standard onsite wastewater systems as outlined in this regulation.

Section 8. Standard Systems

8.1. A standard onsite wastewater system consists of a field of perforated pipe surrounded by gravel, or other conventional trench media product authorized by the Department and installed in such a manner that the clarified effluent from the septic tank or pretreatment unit

will be distributed with reasonable uniformity into the natural soil. The individual absorption trench should not be more than 100 feet, and the trench bottom and perforated pipe or gravel substitute should be installed at a grade of 0 to 2 inches per 100 feet. In order to ensure even distribution of the effluent, all onsite wastewater systems utilizing a distribution box shall have absorption trenches of the same length. Onsite wastewater systems utilizing serial distribution of the effluent shall be provided with an authorized diversion device to allow drying of the most used absorption trenches. The most used absorption trench should be allowed to drain and dry out during the summer months. A minimum of 2 absorption trenches is required to ensure that the absorption area will function even if one absorption trench is disturbed.

Commented [SD4]: Reword this item, trench bottom as well as gravel substitutes ….

8.2. Soil absorption areas utilizing pipe and gravel provide for a trench 24 inches wide, with a standard trench depth of 18 inches from the bottom of the trench to the finished settled grade. Systems designed with trench depths up to 24 inches may be utilized. There shall be a minimum of 6 inches of gravel below the pipe and a minimum of 2 inches of gravel above the pipe. A minimum of 6 inches of cover is required above the gravel bed or gravel substitute. The trench depth may vary in those instances where the soil absorption area was designed to overcome limiting soil characteristics. Trench depths shall be specifically called for in the Designated Representative's design and approved by the Authorized Agent. The absorption area in square feet is twice the total length of the trenches. The minimum spacing between the trenches shall be 6 feet between the trenches and 8 feet center to center. Increased separation between trenches is encouraged to enhance the effectiveness of the trenching system.

8.3. Gravel substitute products authorized by the Department shall be a minimum of 8 inches in height and may not exceed 24 inches in width. The Designated Representative shall specify the product name and model to be installed when utilizing a gravel substitute in the system design.

8.4. Effluent Strength

8.4.1. Septic tank effluent when applied to the soil causes a clogging layer (biomat) to form. The biomat, while increasing treatment performance, reduces the infiltrative capacity of the soil. Septic tank effluent is considered high strength if the waste stream possesses an individual parameter outside of the levels established for residential strength wastewater (see definitions). The Designated Representative shall indicate the assumed strength of the wastewater entering the system and the effluent values that the intended design is to achieve. Soil loading rate charts (Appendix A/Table 1) do not take into consideration the organic loading to the soil. Loading rates found in Appendix A/Table 1 can only be used when the wastewater strength has been reduced to residential strength levels.

8.4.2. Establishments or structures producing high levels of grease and oils, or high TSS or high BOD_5 shall reduce wastewater strength prior to disposal. High strength effluent reducing systems shall be monitored by licensed Certified Monitoring Personnel.

8.5. Sizing the Absorption Area

If the soil is acceptable for the installation of absorption trenches, a percolation test or a seasonal water table determination shall be made at points selected as typical of the area

in which the absorption trenches will be located. Only a Soil Qualified Designated Representative may design a standard onsite wastewater system based on seasonal water table data.

8.5.1. Sizing the system based on Seasonal Water Table Data

When a seasonal water table of more than one duration is present in a soil, the loading rate is determined as follows:

Determine the depth of each seasonal water table.

Adjusting the moderate seasonal water table:

Subtract the depth to the brief SWT from the depth to the moderate SWT and divide by 3;

Subtract the result from the depth to the moderate SWT to obtain the adjusted moderate SWT.

Adjusting the long seasonal water table:

Subtract the adjusted moderate SWT from the depth to the long SWT and divide by 2;

Subtract the above number from the depth to the long SWT to obtain the adjusted long SWT.

Adjusting the long seasonal water table where only brief and long seasonal water tables are encountered:

Subtract the depth to the brief SWT from the long SWT and divided by 6;

Subtract the above number from the depth to the long SWT to obtain the adjusted long SWT.

Compare the loading rates for the brief, adjusted moderate and adjusted long duration seasonal water table using the soil loading charts.

Use the most restrictive loading rate to determine the size of the absorption area.

Soils that only have one duration of seasonal water table are loaded by using the loading rate given in the soil loading charts for the duration of seasonal water table observed.

8.5.2. Sizing the soil absorption area based on Percolation Data

8.5.2.1. Procedures of percolation tests

8.5.2.1.1. Number and location of tests. Three (3) or more test holes spaced uniformly over the primary absorption area and one (1) test hole in the secondary

absorption area are required. Percolation tests shall be performed at the depth of the proposed soil absorption system.

8.5.2.1.2. Type of test holes. The depth of a standard percolation test hole is 18 inches and the diameter shall be 12 inches. If soil and site characteristics indicate that a deeper or shallower system is desired, then the percolation test shall be run at the depth of the bottom of the proposed absorption trench.

8.5.2.1.3. Preparation of test holes. Carefully scratch the bottom and sides of the holes with a knife blade or sharp-pointed instrument, in order to remove any smeared soil surfaces and to provide a natural soil interface into which water may percolate. Remove all loose material from the holes. Add 2 inches of coarse sand or fine gravel to protect the bottom from scouring and sediment.

8.5.2.1.4. Saturation and swelling of the soil. It is important to distinguish between saturation and swelling. Saturation means that the void spaces between soil particles are full of water. This can be accomplished in a short period of time. Swelling is caused by intrusion of water into the individual soil particles. This is a slow process, especially in clay-type soil, and is the reason for requiring a prolonged soaking period. To conduct the test, carefully fill the holes with clear water to a minimum depth of 12 inches above the gravel and maintain at this level, preferably overnight, but no less than 4 hours. This may be achieved by the use of an automatic siphon. This procedure is to ensure that the soil is given time to swell and to approach the condition it will be in during wet seasons of the year.

8.5.2.1.5. After the saturation period, adjust the depth of water in the holes to 6 inches above the gravel. From a fixed reference point, measure the drop-in water level at the end of a 30-minute period, refilling 6 inches above the gravel as necessary. The drop of water level that occurs during the 30-minute period is used to calculate the percolation rate.

8.5.2.1.6. Soils which the first 6 inches of water seeps away in less than 30 minutes after the 24-hours or greater saturation period, the time interval between measurements shall be taken at 10 minutes and the test run for one hour. The drop that occurs during the final 10 minutes is used to calculate the percolation rate.

8.5.2.2. The size of the absorption area may be determined from the results of the percolation test and the data in Appendix A. As noted in Appendix A, soil in which the percolation rate is greater than 75 minutes per inch (mpi) is unsuitable for a standard onsite wastewater system.

8.5.2.3. The size of the absorption area for a system sized using percolation rate data shall not be smaller than that required by seasonal water table data for the same site.

8.6. Serial Distribution

8.6.1. Serial distribution may be used when lines of even length cannot be achieved. The overflow point of the tee or hillside box shall be at the top of the trench media for the line(s) served..

8.6.2. Sizing for both primary and secondary absorption area shall be increased by 25%.

8.6.3. Serial distribution systems designed under percolation test shall not be smaller than required by seasonal water table data.

8.6.4. Serial distribution systems shall not be approved for dosing situations.

8.7. Capping Fill Systems

8.7.1. Standard onsite wastewater systems shall not be installed in fill material. However, fill material may be used as a cap over the natural soil surface to increase the volume available for the storage of effluent.

8.7.2. Where capping fill is incorporated in the design of a standard onsite wastewater system, the distribution system shall be capable of storing effluent to the top of the settled cap.

8.7.3. The absorption trenches on capping fill systems shall be designed and installed in natural soil. However, a variance as provided in 3.1 and 3.2 can be requested to install the absorption trenches partially in the fill, no less than 4 inches into the natural soil, to overcome bedrock separation requirements. Systems utilizing capping fill shall have a minimum 6 inches of settled cover above the gravel bed or gravel substitute.

8.7.4. The slope of the absorption area cannot exceed 12%. Submitted plans shall indicate both the original and the finished elevations referenced to a benchmark.

8.7.5. For absorption areas exhibiting slopes of 6% or less, the full depth of fill shall extend a minimum of 10 feet beyond the edge of the absorption trench then graded at a three to one or less slope. The fill area shall be seeded and watered regularly to prevent erosion. (See Appendix G, Figures 4 and 5.)

8.7.6. For absorption areas exhibiting slopes greater than 6% the full depth of fill shall extend 1 foot beyond the absorption area on the uphill side, 10 feet on the sides of the absorption area, and 20 feet on the downhill side of the absorption area and then all sides graded to a three to one slope or less thereafter. The fill area shall be seeded and watered regularly to prevent erosion. (See Appendix G, Figures 6 and 7.)

8.7.7. For absorption areas exhibiting slopes greater than 6%, a berm and/or drainage ditch to divert surface water is required. The berm and/or drainage ditch shall be constructed no more than 10 feet up slope from the absorption area and extending a minimum 10 feet beyond the applied capping fill.

8.7.8. On slopes of greater than 12%, a variance for capping fill systems may be granted in accordance to Sections 3.1 and 3.2.

8.7.9. The fill material used shall be a uniform loamy soil with maximum clay content of 27% and maximum sand content of 60%. The depth of fill above the original ground surface is measured after settling. Loamy soils can be expected to settle 25%.

8.7.10. The absorption area shall be scarified to destroy and remove the vegetative material. The absorption area shall be tilled to a minimum depth of 4 inches. Stumps should be left in place at the absorption area to prevent extensive disruption of the soil.

8.7.11. Where capping fill is incorporated into the design of a system, only track equipment may be utilized when applying the cap.

8.7.12. The soil cap is a part of the standard onsite wastewater system and shall meet all the setbacks outlined in Section 6.2 of this regulation.

8.8. Dosing Standard Systems

8.8.1. All components and specifications of dosed systems shall be submitted for approval to the Department or its Authorized Agent in accordance with the Department's Guidelines for Submittal of Onsite Wastewater System Applications.

8.8.2. Where a pump or dosing siphon is used to dose an onsite wastewater system, it shall have a capacity sufficient to deliver the required dose volume. Pump controls shall operate automatically and be sufficiently adjustable to deliver the required dose volume.

8.8.3. Only effluent quality pumps shall be utilized in dosing applications. Dewatering and grinder pumps are not approved for septic applications.

8.8.4. Dosing systems that incorporate a reduction in the transport piping diameter at the final point of dispersal or the use of flow reduction orifices shall require an authorized effluent filter device or method. Effluent shall be dosed to the absorption area at a rate not greater than twenty-five (25) percent of the estimated daily usage outlined in Appendix B of this regulation.

8.8.5. A visible and audible high-water alarm shall be required for all electrical dosing situations.

8.8.6. Stand-alone dosing tanks shall have a capacity sufficient to contain the required dose, storage for ballast not less than one quarter of the dose tank capacity, and emergency storage above the high-water alarm not less than one third of the estimated daily usage.

8.8.7. The compartment of combination tanks used for dosing shall have a capacity sufficient to contain the required volume and shall be hydraulically isolated from the primary compartment.

8.8.8. Pre-cast dosing tanks shall meet the same construction and testing requirements for pre-cast septic tanks outlined in Section 10.7 of this regulation.

8.8.9. The approval of any distribution device utilized in dosing situations shall be at the sole discretion of the Department or its Authorized Agent.

8.8.10. Designs utilizing seven (7) or more distribution box outlets and the elevation across the absorption area is greater than six (6) inches, mechanical dosing is required.

8.8.11. Dosing Utilizing a Filtered Pump Vault

8.8.11.1. When dosing from a single compartment septic tank, the tank capacity shall be increased by not less than two hundred fifty (250 gallons) above that specified in Appendix C of this regulation.

8.8.11.2. The filtered pump vault shall be securely mounted to the tank in a manner that prevents movement of the vault during operation.

8.8.11.3. The minimum horizontal separation between the inlet baffle of the septic tank and the filtered pump vault shall be 3 feet.

8.8.11.4. When a system is dosed from a single compartment septic tank, the drawdown per dose cycle shall not be greater than 3 inches.

8.8.12. Dosing Utilizing a Solids Handling Pump Basin

8.8.12.1. Solids Handling Pump Basins used in conjunction with an individual onsite wastewater system require approval by the Arkansas Department of Health prior to any use or installation. Macerating or grinder pump basins are not covered by this section.

8.8.12.2. The pump basin shall be constructed of a durable material such as concrete, high strength plastic, fiberglass, or other authorized material.

8.8.12.3. The bottom of the pump basin shall be solid and structurally capable of supporting the solids handling pump.

8.8.12.4. The pump basin shall have a gas tight removable lid or cover. The lid or cover shall be structurally capable of supporting the weight of the load it will receive based on the location of the pump basin.

8.8.12.5. The pump basin shall be properly vented.

8.8.12.6. The pump basin shall be properly sized to receive or contain no more than 12 hours of normal discharge or one half (1/2) of the daily flow rate whichever is the smallest. Additionally, the pump basin shall be sized so when the pump is activated the pump will operate for a minimum of 15 seconds.

8.8.12.7. Minimum structural dimensions of 18 inches in diameter and 24 inches in depth.

8.8.12.8. Pump basin shall incorporate in its design a means to prevent floating during any given period of low effluent levels within the basin.

8.8.12.9. Each pump basin shall contain as part of the pump discharge assembly a full-open valve and a check valve.

8.8.12.10. The effluent level control device or floats shall be adjusted and maintained at all times to prevent the effluent in the pump basin from rising within 2 inches of the invert of the building drain inlet into the basin.

8.8.12.11. Solids handling pumps used with this type of basin shall be capable of handling spherical solids with a diameter of up to and including 2 inches.

8.8.12.12. Solids handling pump shall be sized to provide for peak flow events and provide a full flow velocity of at least 2 feet per second in the discharge piping.

8.8.12.13. Solids handling pump and basin shall be equipped with an audio and visual alarm.

8.8.13. Electrical Connections

8.8.13.1. Electrical connections shall be complete at the time of final system inspection unless otherwise specified by the Department's Authorized Agent.

8.8.13.2. System wiring shall be encased in electrical conduit.

8.8.13.3. Splices within system wiring shall be made with heat shrink connectors or waterproof wire nuts. System wiring may use control floats and/or pump electrical leads of such length allowing connections at remote control panel location.

8.8.13.4. Electrical connections which terminate shall be in an internal and or external splice boxes and shall be of watertight construction.

8.8.13.5. Conduit and connection boxes shall be sealed with electrical grease or other waterproof electrical sealant in order to minimize corrosion due to moisture and/or gasses escaping the system.

8.8.13.6. System wiring shall comply with the Arkansas State Electrical Code.

8.8.13.7. Pumps and pump alarms shall not be on the same circuit.

8.9. Low Pressure Distribution (LPD)

8.9.1. Low pressure distribution allows an absorption area or secondary treatment filter to be dosed evenly across the entire area. The discharge assembly of LPD systems consists of small diameter piping with orifices drilled at predetermined intervals through which effluent is dosed to the absorption area or secondary treatment filter. All LPD systems shall meet the following requirements. (See Appendix G, figure 10.)

8.9.2. Piping in LPD systems shall be constructed of schedule 40 PVC pipe. Joints or connections shall be primed and welded with the appropriate chemical agents.

8.9.3. Orifices may range in size from 0.125 (1/8) inch to 0.1875 (3/16) inch. Orifices shall be centered in the pipe, pointed up or down, and shielded. For soils with high hydraulic conductivity, the orifice spacing shall not exceed 24 inches. For soils with moderate hydraulic conductivity, the orifice spacing shall not exceed 48 inches. Orifices shall not be installed within twelve inches of the manifold pipe. LPD applications require an authorized effluent filter.

8.9.4. In situations where the LPD manifold discharge assembly is located at a lower elevation than the pump, a 0.25 (1/4) inch siphon-breaker hole shall be drilled in the pump effluent line or vacuum breaker above the high-water level to prevent siphoning. An extra 2 gallons per minute shall be added to the system flow rate to accommodate the siphon-breaker hole.

8.9.5. The squirt height also referenced as, distal pressure, distal height, or residual head or height shall not be less than 5 feet.

8.9.6. The dose volume shall not exceed 0.5 gallons per orifice.

8.9.7. Plastic or brass valves, either globe or gate, shall be installed between the manifold and distribution laterals in order to facilitate orifice head adjustment. Control valves shall be encased in readily accessible valve boxes or similar encasement.

8.9.8. A 90-degree electrical sweep with threaded cleanout or valve shall be installed at each end of the laterals for maintenance. Cleanouts shall be encased in readily accessible valve boxes or similar encasement.

8.9.9. LPD absorption trenches shall contain a minimum of 8 inches of gravel and 4 inches of cover above the gravel bed. Authorized gravel substitutes may be used in LPD design. See Appendix G, figure 3.

8.10. Construction Considerations

8.10.1. Careful construction is important in constructing a satisfactory absorption area. Attention shall be given to the protection of the natural absorption properties of the soil. Care shall be taken to prevent sealing of the surface on the bottom and sides of the trench. Trenches shall not be excavated when the soil is wet enough to smear or compact easily. When significant smearing of the sidewalls or bottom of the absorption trench occurs during installation, construction shall be halted and the local Authorized Agent shall be contacted for guidance. During the wet season periods of the year or after any significant rainfall event, failure to obtain authorization from the local Authorized Agent for beginning construction of an onsite wastewater system may void the Onsite Wastewater System Permit. Open trenches shall be protected from surface run-off to prevent the entrance of any silt and debris. If it is necessary to walk in the trench, a temporary board laid on the bottom will reduce damage by compaction. Smeared or compacted surfaces shall be raked to a depth of one inch, and loose material removed, before the gravel is placed in the trench. Perforated pipes shall be bedded on undisturbed earth to prevent settling, lateral lines shall be surrounded by clean, graded gravel, washed rock, or other authorized aggregate. The aggregate material may range in size from 1/4 inch to 1-1/2 inches.

8.10.2. The top of the gravel shall be covered with untreated building paper or other authorized materials before placing the earth backfill. This will help prevent the gravel from becoming clogged with the earth. An impervious covering shall not be used, as this interferes with evaporation. The cover over a new absorption trench shall be adequately overfilled to allow for settling.

8.10.3. Heavy machinery, exclusive of the equipment needed to install the system, shall be excluded from the absorption area unless special provision is made to support the weight.

8.10.4. Distribution boxes/devices. A distribution box/device is required for every standard absorption system. Distribution devices shall be designed for serviceability, including but not limited to, risers to grade. The purpose of the box/device is to ensure equal distribution of septic tank effluent to the lateral lines. It is important that the entrance to each lateral line from the distribution box be set at the same elevation to attempt to ensure equal flow into all lines. The design of the distribution box and absorption system can be varied to meet most topographical conditions encountered, while giving proper grade and alignment for all laterals. Distribution boxes shall be sealed, bedded in concrete or gravel on undisturbed ground, and water leveled with leveling devices. Distribution boxes shall have an easily removable cover to facilitate leveling, inspection, and repairs. Inlet and outlet lines at the distribution box shall be installed in such a manner as to be firmly supported and adequately sealed as approved by the Authorized Agent. Where the elevation across the absorption area is greater than six inches, the outlet invert (flowline) of the distribution box shall be installed at an elevation equal to or greater than the finished ground elevation of the highest line of the absorption area. See Appendix G, Figure 2.

8.10.5. Septic tanks. On sites that do not have sufficient slope to allow the distribution box to be installed as in 8.10.4, the flow line of the septic tank outlet shall be at an elevation equal to or greater than the finished ground elevation of the highest line of the absorption area. See Appendix G, Figure 1.

8.10.6. Absorption trenches shall not start closer than 5 feet from the distribution box. A horizontal separation of 5 feet shall be required between the absorption area and tight line trench. In systems utilizing a distribution box, lateral lines shall be of the same length. Distribution devices used in conjunction with soil absorption systems shall be approved by the Department prior to their use or installation.

8.10.7. The tight line or manifold trench shall not be excavated lower than the flow line of the trench media to be installed; however, in no case will the tight line trench be excavated lower than twelve (12) inches from the ground surface.

8.10.8. Materials used in the construction of the onsite wastewater system shall meet the following requirements (New products may be authorized by the Department as technology allows).

8.11. SOLID PIPE

8.11.1. Pipe installed from the outlet tee of the septic tank to the distribution box or diversion device shall be Schedule 40 pipe for whatever distance is required to reach undisturbed soil, but in no case shall be less than ten (10) feet. Once a solid trench bottom is achieved the Schedule 40 pipe may be adapted to SDR 35 PVC pipe or ASTM 3034 PE (polyethylene) pipe for the remaining distance to the distribution box or diversion device. SDR 35 PVC, ASTM 3034 PE or Schedule 40 PVC shall be used from the distribution box or diversion device to the perforated field line pipe.

8.12. PERFORATED DRAIN PIPE

8.12.1. Perforated pipe in absorption lines shall be ASTM D2729 PVC or ASTM F-810-12 PE.

8.13. Any pipe under driveways, roadways, parking areas, or any area where traffic will pass over shall be constructed of Schedule 40 PVC, cast iron, or use a steel sleeve. A cleanout shall be located between the stub-out and the septic tank.

8.14. House sewer lines shall be installed and maintained in accordance with the Arkansas State Plumbing Code.

Section 9. Alternate Systems

9.1. Alternate systems outlined in this section shall not be approved as a uniform plan of development in any municipality, community, subdivision, or other developed area.

9.2. Alternate systems outlined in this section shall be installed by a licensed septic system installer. Installers may be required to attend special training sessions before being allowed to install certain types of alternate systems.

9.3. In addition to the permitting requirements outlined in Section 4 of this regulation, a Memorandum of Agreement signed by the property owner shall be submitted as part of the Onsite Wastewater System Application for all alternate systems.

9.4. The Department or its Authorized Agent may require the Designated Representative to oversee the construction of projects with unusual or rarely used designs.

9.5. Surface Discharging Systems

9.5.1. Surface discharging systems shall not be approved for sites with soil conditions, which meet the standards referenced in Sections 7.5, and 7.6 for the installation of standard onsite wastewater systems.

9.5.2. Prior to approval, sites proposed for surface discharging systems, concurrence shall be obtained from one of the following individuals in addition to the Local Authorized agent.

9.5.2.1. A Professional Soil Classifier of the Department or a designated Authorized Agent trained and proficient in soil analysis.

9.5.2.2. A private Professional Soil Classifier holding a current Designated Representative License retained at the discretion of the Permit Applicant.

9.6. Surface discharging systems are subject to National Pollutant Discharge Elimination System (NPDES) Permit requirements.

9.7. Disinfection

9.7.1. Surface discharging systems shall be adequately disinfected prior to discharge.

9.7.2. Chlorination, ozone induction, and ultraviolet exposure are all acceptable means of disinfection for surface discharges. Installation, operation, and performance data supplied by the manufacturer shall be submitted with all designs incorporating ozone or ultraviolet light devices. A sample port shall be installed within five (5) feet of the disinfection outlet or chlorine contact chamber with a minimum six (6) inches of fall for sample collection.

9.7.3. Chlorinators used in surface discharging systems shall produce a minimum 10 parts per million chlorine solution during peak flow.

9.7.4. A baffled contact chamber sufficient in size to provide a thirty (30) minute retention time with a minimum flow of one (1) gallon per minute shall be required after the chlorinator for all surface discharging systems utilizing chlorine disinfection. The minimum size of a chlorine contact chamber shall be thirty (30) gallons.

9.7.5. The point of discharge from the chamber shall be above the high-water level of a receiving stream or ditch. The chamber discharge elevation shall also be below its influent elevation to prevent flooding of the treatment unit.

9.7.6. When a surface discharging system fails to function properly or does not consistently meet the discharge requirements, the discharge of wastewater shall stop immediately. The owner shall be allowed to use the septic tank or mechanical treatment unit as a holding facility until adequate repairs are made.

9.8. Sites considered for a surface discharging system shall meet the following minimum requirements in addition to setback requirements outlined in Section 6.2 of this regulation.

9.8.1. The lot size for a surface discharging system shall be 3 acres or greater.

9.8.2. The point of discharge shall be 300 feet or greater from any adjacent dwelling or commercial establishment.

9.8.3. The point of discharge shall be 150 feet or greater from any adjacent property line not in the direction of horizontal flow.

9.8.4. The point of discharge shall be 200 feet or greater from any property line in the direction of flow on sites exhibiting slopes of 12% or less.

9.8.5. The point of discharge shall be 100 feet or greater from the dwelling or building served by the surface discharging system.

9.8.6. The slope of the discharge area shall not be greater than 12%. However, variances for sites proposed for surface discharges that exhibit a slope greater than 12% may be requested of the Department in writing. Approval of such variances shall be at the sole discretion of the Department.

9.9. Drip Dispersal Systems

9.9.1. See Rules and Regulations Pertaining to Drip Dispersal.

9.10. Holding Tanks

9.10.1. Holding tanks shall not be approved on sites acceptable for the installation of standard onsite wastewater systems as outlined in Section 7.5 and 7.6 of this regulation.

9.10.2. Holding tanks shall be approved only for domestic waste from commercial establishments, excluding grocery stores and / or food service establishments.

9.10.3. Holding tanks shall not be approved for residencies, full or part time.

9.10.4. The minimum capacity of any holding tank shall be ten (10) times the estimated daily usage as outlined in Appendix B of this regulation or 1000 gallons, whichever is greater. When two or more tanks are required to meet the holding capacity, detailed plans shall be submitted.

9.10.5. A service riser with a minimum diameter of 12 inches and installed above ground surface shall be required on all holding tanks. Service risers installed on holding tanks shall be adequately secured to prevent unauthorized access.

9.10.6. Facilities shall be maintained to allow a pumper vehicle to drive within 10 feet of the service riser in all weather conditions.

9.10.7. Proof of a notarized contract with a licensed septic tank cleaner shall be submitted with the application for construction. The contact shall provide for cleaning with 24 hours of notification and shall state when the wastewater will be deposited.

9.10.8. Holding tank contents shall not be land applied. The contents of a holding tank shall only be disposed of by means of deposition into a municipal wastewater treatment plant with which the septic tank cleaner has permission to discharge.

9.10.9. Holding tanks shall comply with the specifications for septic tanks outlined in Section 10 of this regulation.

9.10.10. A visible and/or audible high-water alarm indicating when the tank has reached 75% capacity shall be installed inside the structure served by the holding tank. Information on the alarm system's brand name, manufacturer, use, and installation shall be provided with the submittal of plans. The name of the licensed cleaner and his telephone number shall be displayed on the alarm.

9.10.11. A monitoring contract is required. See Section 12.

9.11. Composting/Incinerating Toilets

9.11.1. A composting toilet is a device specifically designed to retain and process body wastes and, in some cases, household garbage by biological degradation. The process may be either thermophilic or mesophilic, depending on the design of the toilet. Thermophilic devices are normally smaller and require some type of energy input to maintain the desired temperature. Mesophilic devices rely on the heat produced by the biological process to maintain the required temperature. Whether or not a device can accept household garbage is dependent on product design and intended use. An incinerating toilet is a device designed to reduce body wastes, both urine and feces, to an ash residue. The type of energy used to incinerate wastes is dependent upon the design of the device used.

9.11.2. Only pre-manufactured composting or incinerating toilets authorized by the Department shall be utilized in the onsite wastewater system. Under NSF standard 41, composting and incinerating devices shall be evaluated by an ANSI approved laboratory.

9.11.3. Wastewater, exclusive of urine and feces, produced by the structure served by a composting/incinerating toilet shall be renovated or disposed of in accordance with Sections 8 or 9 of this regulation.

9.11.4. The stabilized compost from a composting toilet shall be buried onsite or deposited in an approved sanitary landfill.

9.11.5. The ash from an incinerating toilet requires no special handling since any pathogen would be destroyed in the incineration process.

Section 10. Septic Tanks

10.1. The minimum liquid capacities required in Appendix C, allow for the use of standard household appliances. Garbage grinders are not recommended for standard onsite wastewater systems.

10.2. Location. Consideration should also be given to the location from the standpoint of cleaning and maintenance. Septic tanks shall be located so that septic tank cleaning equipment trucks can be driven within reasonable vertical and horizontal distance of the tank for the purpose of tank cleaning. Where public sewers may be installed at a future date, provision should be made in the household plumbing system for connection to such sewer.

10.3. Septic tanks, septic holding tanks, pump basins and dosing tanks used in Arkansas shall be manufactured by an individual holding a current septic tank manufacturer license issued by the Department. The manufacturer is responsible for producing septic tanks, pump basins, and dosing tanks that meet current requirements as outlined in these regulations.

10.4. The septic tank installer is responsible for inspecting the tank(s) delivered to the jobsite to ensure a licensed manufacturer produced it and that it remains in a sound, watertight condition throughout the installation. Septic tanks, septic holding tanks, pump basins and dosing tanks shall be installed and bedded on a firm, level, gravel surface or according to manufacturer's instructions. Influent and effluent lines connected to the tank shall be sealed in a manner that prevents groundwater infiltration and pipe movement. Only authorized rubber boot type pipe penetration seals shall be cast into the tank.

10.5. Septic holding tanks shall be manufactured with only an inlet pipe penetration. No outlet(s) or other means of discharge shall be cast into the tank.

10.6. Septic tanks no longer in use shall be pumped out by a licensed septic tank cleaner, collapsed, and filled with clean material at the time of abandonment.

10.7. Specifications for septic tanks and dosing tanks.

10.7.1. General. Septic tanks shall be of watertight construction. . Approved materials include concrete, fiberglass, and polyethylene. Approval of other materials will be considered on a case-by-case basis. Septic tanks sold or installed in the State of Arkansas shall meet the specifications in these regulations and be approved by the Department. With the exception of wall and bottom thickness, pre-cast tanks and cast-in-place tanks shall meet the same design requirements.

10.7.2. Cast-in-place concrete tanks. Permit applications utilizing a cast-in-place concrete tank shall include a plan approved by a professional engineer.

10.7.3. Pre-cast concrete septic tanks. Pre-cast septic tanks sold or installed in Arkansas shall be manufactured in accordance with the AMERICAN SOCIETY FOR TESTING AND MATERIALS (ASTM) STANDARD SPECIFICATION FOR PRE-CAST CONCRETE SEPTIC TANKS C 1227-05-cast septic tanks shall be constructed with high strength concrete made with Portland cement and achieve ~~a~~ compressive strength of 4000 pounds / square inch at 28 days of age. No aggregate used in the concrete mix is to exceed a diameter or length of 0.5 inch. Lightweight aggregates shall meet ASTM SPECIFICATION C 330 SPECIFICATION FOR LIGHTWEIGHT AGGREGATES FOR STRUCTURAL CONCRETE. Water used in mixing concrete shall be clean and free of injurious amounts of oil, alkalines, acids, salts, or other substances that may be incompatible with concrete. Tanks shall be designed so they will not collapse or rupture when subjected to anticipated earth and hydrostatic pressures when the tanks are either full or empty.

10.7.3.1. Pre-cast concrete tanks shall be reinforced with a minimum of #10, 6 inches by 6 inches, welded concrete reinforcement wire overlapped a minimum of 6 inches and tied at the edges. Reinforcement rods are required to be added at lift points. Chairs, bolsters, braces, and spacers in contact with the forms shall have a corrosion resistant surface. Reinforcement shall be placed as near the center of the walls as possible and shall have a minimum of one-inch concrete cover.

10.7.3.2. The Department shall approve new forms or modifications to existing forms.

10.7.3.3. The forms used in septic tank manufacture shall be sufficiently rigid and accurate to maintain the dimensions of the tank. Casting surfaces shall be of a smooth, non-porous material. Form releasing agents used shall not be injurious to the concrete.

10.7.3.4. Concrete for the tank walls and floor shall be placed in the forms in a single, continuous pour. The concrete shall be placed in the forms at a rate that allows the concrete to consolidate in all parts of the form and around all reinforcement steel and imbedded fixtures without segregation of materials. The finished tank wall shall be smooth and have a uniform thickness not less than 3.0 inches. The lid and floor of the tank shall be no less than 4.0 inches thick and adequately reinforced to support the load to which it may be subjected. At a minimum, the lid shall be reinforced with #10, 6 inches by 6 inches, welded wire mesh and 0.5-inch reinforcement rods (#4 rebar) on 18-inch centers. During delivery, the tanks are to be properly handled to assure the installation of a tank that is watertight and otherwise in good condition.

10.7.3.5. Concrete septic, holding and dosing tanks buried two (2) feet or greater shall require the manufacturer's certification relating to structural integrity.

10.7.3.6. Joints between the tank body and lid or between sections of multi-piece tanks shall be sealed to prevent leakage during settling or shifting. The sealant shall be resistant to corrosion and anaerobic activity and meet ASTM C990-09 Standard Specification for Joints for Concrete Pipe, Manholes, and Precast Box Sections Using Preformed Flexible Joint Sealants. The inside joint seam gap, between the 2 sections placed together before sealing, is not to exceed 1/4 (0.25) inch.

10.7.3.7. The lid and upper and lower sections of septic tanks shall be connected with non-corrosive mechanical devices by the manufacturer to insure no separation occurs.

10.7.3.8. Septic tank manufacturers are required to demonstrate the water tightness on their products when requested by the system designer, installer or the Authorized Agent. Vacuum testing shall be the only method for water tightness during septic tank manufacturers annual production plant inspection. Testing for leakage may be done using either vacuum testing or water pressure testing at the time of delivery. Small leaks found during testing may be sealed with an appropriate sealer. In no case will a tank be considered acceptable which has evidence of large cracks or repairs that compromise the structural integrity and water tightness of the tank.

10.7.3.8.1. Vacuum testing. Seal the empty tank and apply a vacuum to 4 inches (100 mm) of mercury. The tank is approved if 90% of the vacuum is held for 2 minutes. Manufacturers shall be capable of vacuum testing all tanks.

10.7.3.8.2. Water-pressure testing. Seal the tank; fill with water to the level of the top of the access port, let stand for 24 hours. Refill tank. The tank shall be considered water tight if the water level is held for 60 minutes.

10.7.3.9. Precast concrete septic tanks manufactured and installed in Arkansas shall be clearly, permanently, and legibly labeled with the following:

10.7.3.9.1. The name of the individual or company that manufactured the tank.

10.7.3.9.2. The liquid capacity of the tank in gallons.

10.7.3.9.3. The inlet and outlet shall be indicated. Tanks with more than one outlet shall utilize authorized tank penetration seals.

10.7.3.9.4. The date of manufacture of the tank and lid.

10.7.4. Tank proportions. The liquid depth of any tank compartment shall not be less than 36 inches and shall not exceed 72 inches. The minimum horizontal distance from the inlet to the outlet of any tank may not be less than 72 inches. Storage capacity is required above the liquid line to provide for that portion of scum that floats above the liquid in all septic tanks. One inch shall be provided at the top of the tank to permit the free passage of gas back to the inlet and house vent pipe. For tanks having vertical sides, the distance between the inside top of the tank and the liquid level shall be 12.5% of the liquid capacity or 9 inches, whichever is greater. In horizontal, cylindrical tanks, this distance should be equal to 20% of the tank diameter.

10.7.5. Inlet and outlet. Four-inch or larger sanitary tees shall be used as inlet and outlet devices in all septic tanks. The septic tank manufacturer shall provide properly constructed inlet and outlet devices with each tank. The effluent line leaving the tank shall be Schedule 40 PVC. The inlet invert shall enter the tank 2 to 4 inches above the liquid level in the tank to allow for a momentary rise in liquid level during discharges to the tank. This free drop prevents black water and standing of solid material in the house sewer leading to the tank. The inlet tee shall extend at least 6 inches below the liquid level in the tank and extend above the liquid level to a minimum of one inch from the top of the tank. In no case shall the inlet device be greater in length than the outlet device.

10.7.5.1. Outlet tees shall extend to a distance below the surface 35% to 45% of the liquid depth.

10.7.6. Authorized outlet filter products are recommended on all septic tanks. Outlet filters have been shown to reduce total suspended solids (TSS) and biochemical oxygen demand (BOD) and should be utilized to protect and lengthen the life of the absorption area. Proprietary gas deflectors designed to deflect or otherwise prevent solids from entering the outlet tee are not required but are recommended to increase the efficiency of the septic tank. Where gas deflectors, outlet filters, or other devices requiring routine maintenance are installed in the tank, a service riser extending to grade shall be installed over the outlet inspection port. Inlet and outlet baffles and devices shall be evaluated and authorized by the Department prior to use. Manufacturers may submit product samples and ancillary documentation to the Department for evaluation. After evaluation, the Department may give authorization for use in the state. The list of authorized products will be routinely updated on the ADH website.

10.7.7. Fiberglass and Plastic septic tanks**.** Fiberglass and Plastic septic tanks shall comply with International Association of Plumbing and Mechanical Officials. The manufacturer shall supply without charge satisfactory evidence of approval and compliance with IAPMO PS 1-2004e1 construction and manufacturing requirements. Fiberglass and Plastic septic tanks shall be tested for water tightness using one to the prescribed methods found in IAPMO PS 1-2004e1.

10.7.8. Service Risers. Access shall be provided over the inlet and outlet tees or other devices, and to each tank compartment by means of a service riser. Maintenance ports shall be sealed and watertight. Where the top of the tank is located below the finished grade, service risers shall extend to or above the finished grade. The extension can be made using risers of authorized material and fitted with tight covers and secured to prevent unauthorized access. Proper attention shall be given to the accident hazard involved when maintenance ports are extended close to the ground surface. Service risers shall be a minimum of 12 inches in diameter. Service risers providing access to a pump compartment or dosing tank shall be a minimum of 18 inches in diameter. Risers shall be installed by the manufacturer.

10.7.8.1. An entry prevention device is recommended for riser openings greater than 12 inches in diameter.

10.8. Grease Interceptors. Pre-cast grease interceptors sold and used in Arkansas shall be manufactured in accordance with the AMERICAN SOCIETY FOR TESTING AND MATERIALS (ASTM) Standard Specification for Precast Concrete Grease Interceptor Tanks C1613-10. Grease interceptors shall be installed and maintained in accordance with the ARKANSAS STATE PLUMBING CODE. The minimum volume for a grease interceptor utilized with an onsite wastewater system shall be 500 gallons. Grease interceptors installed below finished grade will be installed with service risers to the finished grade. The size of the service riser will be adequate in size to accommodate proper inspection and maintenance. See Appendix G, Figure 11.

10.9. House sewer. The house sewer is an important part of the private sewage disposal system. It should convey the sewage from the building to the septic tank inlet, but not at a high velocity that would cause disturbance in the septic tank. The house sewer shall not be reduced in size from the house drain to the septic tank.

10.10. House sewer grade. The house sewer should be installed with a uniform slope that complies with the Arkansas Plumbing Code.

10.11. Cleanouts. The house sewer line shall contain a 4-inch cleanout before entering the septic tank or treatment plant. Changes in direction greater than 45 degrees and/or every 100 feet require a cleanout.

10.12. Septic Tanks in Series.

10.12.1. When more than one septic tank is used in series, the first tank shall be no less than 50% of the total septic tank design capacity.

Section 11. Secondary Treatment

Secondary treatment systems utilize an additional means of septic effluent treatment subsequent to the primary treatment performed by a septic tank. Some aerobic treatment units (ATU's) do not require that effluent be treated by a septic tank prior to treatment by the ATU. Secondary treatment units incorporated into the design of an onsite wastewater system shall comply with the following specifications.

11.1. Secondary treatment units with surface discharge shall meet current N.P.D.E.S. discharge requirements.

11.2. Onsite wastewater systems incorporating secondary treatment units shall comply with the Onsite Wastewater Systems Monitoring Program outlined in Section 12 of this regulation.

11.3. Aerobic Treatment Units (ATUs)

11.3.1. Only ATUs authorized by the Department shall be utilized in onsite wastewater systems. ATUs shall meet and be listed under current American National Standards Institute/National Sanitation Foundation (ANSI/NSF) Standard 40 requirements.

11.3.2. ATUs shall be installed according to the manufacturer's specifications as authorized by the Department. ATU's shall be installed as provided in Section 10.4. Some ATUs require installer certification provided by the manufacturer in order to install and/or maintain the unit.

11.3.3. Aerobic Treatment Units (ATU) may be substituted for a septic tank under the following conditions:

11.3.3.1. The tank construction of an ATU shall comply with the requirements found within Section 10.

11.3.3.2. No aeration, filter media or other treatment device within said tank shall restrict the flow of effluent into or out of the tank or reduce the capacity in gallons as stated in Appendix C.

11.3.3.3. No aeration, filter media or other treatment device shall be connected directly or indirectly to the outlet baffle of the tank.

11.3.3.4. The substitution of an ATU in place of septic tank shall be at the sole discretion of the Department.

11.4. Multiple Pass Filters

11.4.1. Recirculating Sand Filters (RSF)

11.4.1.1. Recirculating Sand Filters pass effluent treated by a septic tank or ATU through a sand and/or gravel bed, built on site, prior to subsurface absorption or surface discharge. Recirculating sand filters shall meet the following criteria:

11.4.1.2. A septic tank or ATU shall be required as the primary treatment of effluent prior to treatment by an RSF.

11.4.1.3. Effluent shall be dosed to an RSF by a pump housed in a filtered pump vault authorized by the Department.

11.4.1.4. Effluent shall be distributed to an RSF by means of low pressure distribution as outlined in Section 8.9 of this regulation.

11.4.1.5. The collection line in the bottom of an RSF shall not be less than 4 inches perforated or slotted schedule 40 PVC pipe.

11.4.1.6. The dosing rate for RSFs shall not be greater than 0.25 gallons per orifice per dose (gal/orifice/dose).

11.4.1.7. The initial recirculation rate for RSFs shall be 4:1. Depending upon water usage, the recirculation rate may be adjusted after system evaluation.

11.4.1.8. The loading rate for RSFs shall not be greater than 5 gallons per square foot per day (gal/ft^2/day).

11.4.1.9. RSFs may be installed either in or above ground. However, the top of the RSF bed shall not be installed below the finished grade of the ground surface.

11.4.1.10. A PVC liner not less than 30 mils in thickness, with inlet and outlet boots shall be required in all RSFs in order to minimize groundwater infiltration into the system.

11.4.1.11. Not less than 2 inches of gravel cover shall be applied atop the collection pipe in the bottom of an RSF. The gravel used shall be crushed rock or rounded rock, 0.5 inch to 1.5 inches in diameter.

11.4.1.12. Not less than 4 inches of 3/8-inch pea gravel shall be applied atop the crushed or rounded rock in the bottom of an RSF in order to prevent migration of filter sand into the collection piping and out of the filter.

11.4.1.13. Not less than 24 inches of filter sand shall be applied atop the pea gravel in the bottom of an RSF. Filter media used shall be 1.5 millimeters to 2.0 millimeters in diameter, with a uniformity coefficient of 2.0 or less.

11.4.1.14. Not less than 3 inches of 3/8-inch pea gravel shall be applied atop the filter sand in a RSF. The low pressure distribution system servicing an RSF shall be installed atop this layer of pea gravel.

11.4.1.15. Not less than 3 inches of gravel shall be installed as cover over the low pressure distribution system servicing an RSF.

11.4.1.16. The top of the RSF filter bed shall be left uncovered.

11.5. Other Filters

Proprietary media filters such as peat filters, gravel filters, and geo-textile filters shall be designed and installed in accordance with the manufacturer's specifications as authorized by the Department.

Section 12. Onsite Wastewater Systems Monitoring Program

Owners of holding tanks, or alternative wastewater systems are required to maintain a Monitoring Contract with a Monitoring Person registered by the Department for the life of the system. A Monitoring Person shall be authorized by the manufacturer in order to provide a contract for the monitoring of any proprietary system. No homeowner shall be allowed to monitor their own system.

12.1. The Monitoring Contract and the Memorandum of Agreement shall be submitted with the Application for an Onsite Wastewater System Permit (EHP-19).

12.2. Monitoring Contracts shall include the following minimum terms or services:

Frequency of system assessments

Assessment of system components

Assessment of proper servicing of grease interceptor, if applicable

Reporting to the Arkansas Department of Health

12.3. Assessments shall be conducted for all systems monitored under the program a minimum of once every 6 months.

12.4. Monitoring Contracts with Certified Onsite Wastewater Systems Monitoring Personnel with additional monitoring terms and services may be required by the Department for approval of systems permitted under the variance and experimental sections 3.1 and 3.2

12.5. Onsite Monitoring reports shall be submitted to the homeowner, local health unit, and the Department's database. Certified Monitoring Personnel shall maintain a copy for their records.

12.6. Monitoring personnel shall be registered by the Department. To maintain certification, Onsite Wastewater Systems Monitoring Personnel shall pay a fifty dollar ($50.00) annual fee and attend an annual training session. Failure to pay the registration renewal fee by March 1 shall result in a late fee equal to one half of the renewal fee. Failure to renew within a calendar year shall require re-examination in order to become registered.

12.7. The monitor's license may be revoked or suspended whenever any provision of these Rules and Regulations is violated pursuant unto the Arkansas Administrative Procedures Act. Each monitor shall furnish proof of current registration upon request by an Authorized Agent of the Department.

Section 13. Designated Representative

13.1. A fee of one-hundred dollars ($100.00) shall be levied annually for the registration of each Designated Representative. Each Designated Representative who operates within the State of Arkansas, regardless where their home office is located, shall be registered by the Department. The registration will be issued by the Department upon successful completion of an examination and compliance with the provisions of the Rules and Regulations. Each Designated Representative shall attend an annual training course approved by the Department and continue to demonstrate competency in practice to ensure the purpose of this regulation. Registration renewal fees shall be renewable on January 1 of each year. Failure to pay the registration renewal fee by March 1 shall result in a late fee equal to one half of the renewal fee. Failure to pay the registration renewal fee within a calendar year or failure to attend an approved training course shall require re-examination in order to become registered.

13.2. The Designated Representative's license may be revoked or suspended whenever any provision of these Rules and Regulations is violated pursuant unto the Arkansas Administrative Procedures Act. Each Designated Representative shall furnish proof of current registration upon request by an Authorized Agent of the Department.

Section 14. Installers

14.1. Each installer who operates within the State of Arkansas, regardless of wherever the home office may be, shall be registered by the Department. The registration will be issued by the Department or its Authorized Agent upon successful completion of an examination and compliance with the provisions of the Rules and Regulations. A registered installer shall be present at the job site during all phases of system construction. In order to maintain registration, an installer shall attend at least one (1) annual training course approved by the Department and continue to demonstrate competency in practice to ensure the purpose of this regulation. The registration shall be renewable on January 1 of each year. Failure to renew by March 1 shall result in a late fee equal to one half of the renewal fee. Failure to renew within a calendar year shall require re-examination in order to become registered. Installers licensed at the time of the effective date of this regulation will be exempt from the initial examination.

14.2. The installer's license may be revoked or suspended whenever any provision of these Rules and Regulations is violated pursuant unto the Arkansas Administrative Procedures Act. Each installer shall furnish proof of current registration upon request by an Authorized Agent of the Department.

14.3. It shall be a violation of these Rules and Regulations for an installer to start the actual construction, alteration, repair or extension of any onsite wastewater system without first notifying the Department or its Authorized Agent 24 hours in advance.

14.4. Installer's registration fee. A fee of one-hundred dollars ($100.00) shall be levied annually for the registration of each installer. The registration fee shall be made payable to the Arkansas Department of Health and shall be attached to the completed application and forwarded to the Arkansas Department of Health.

Section 15. Manufacturers

Septic tank manufacturers doing business in Arkansas shall hold a valid registration issued by the Department. A registration fee of one hundred dollars ($100.00) will be levied annually, payable by July 1st. Septic tank manufactures shall submit an annual inspection report conducted within 60 days prior to registration renewal. Production plant inspection conducted by a National Pre-Cast Concrete Association Onsite Wastewater Certified Program Representative will be considered to meet the registration inspection requirement.

Section 16. Code of Ethics

All licensees shall disclose all known or potential conflicts of interest that could influence or appear to influence their judgment or the quality of their services. All licensees shall not accept compensation, financial or otherwise, from more than one party for services on the same project, or for services pertaining to the same project, unless the circumstances are fully disclosed and agreed to by all interested parties. All licensees shall not solicit or accept financial or other valuable consideration, directly or indirectly, from outside agents in connection with the work for which they are responsible.

Section 17. Penalties

Any person, firm, corporation or association who violates any of the provisions of Act 402 of l977 (A.C.A. 14-236-101, et seq.), or any Rules and Regulations promulgated under the authority of Act 402 of l977 (A.C.A. 14-236-101, et seq.), shall upon conviction, be deemed guilty of a misdemeanor and shall be punished by a fine of not less than one hundred dollars ($100.00) nor more than one thousand dollars ($1,000.00). Installers, Designated Representatives, Certified Monitoring Personnel and Septic Tank Manufacturers who do not renew their licenses prior to 60 days after the annual expiration date will be charged a late fee equal to one half (1/2) the annual fee.

Section 18. Severability

If any provisions of these Rules and Regulations, or the application thereof to any person is held invalid, such invalidity shall not affect other provisions or applications of these Rules and Regulations which can affect without the invalid provisions of application, and to this end the provisions hereto are declared to be severable.

Section 19. Repeal

All Regulations and parts of Regulations in conflict herewith are hereby repealed.

Section 20. Certification

This will certify that the foregoing Rules and Regulations Pertaining to Onsite Wastewater Systems were adopted by the Arkansas Department of Health at a regular session of the Board of Health on August 1, 2019.

_____

Nathaniel Smith, MD, MPH
Director and State Health Officer
Arkansas Department of Health

Appendix A

Absorption Area Requirements

Percolation Rate (Minutes required for water to drop 1 inch in prepared test hole)	Loading Rate (Required gallon of effluent per square foot per day)
10-15	.75
16-20	.69
21-25	.63
26-30	.59
31-35	.56
36-40	.53
41-45	.50
46-50	.48
51-56	.45
56-60	.42
61-65	.40
66-70	.38
71-75	.37

TABLE 1

LOADING RATES FOR RESIDENCES AND COMMERCIAL ESTABLISHMENTS

A. SOILS WITH A MODERATE HYDRAULIC CONDUCTIVITY

SEASONAL WATER TABLE (SWT) DEPTH	BRIEF SWT GPD/Sq. Ft.		MODERATE SWT GPD/Sq. Ft.		LONG SWT GPD/Sq. Ft.	
Inches	8 Ft. Centers	10 Ft. Centers	8 Ft. Centers	10 Ft. Centers	8 Ft. Centers	10 Ft. Centers
8	0.00	0.00	0.00	0.00	0.00	0.00
9	0.03	0.03	0.01	0.01	0.00	0.00
10	0.06	0.06	0.02	0.02	0.01	0.01
11	0.10	0.10	0.03	0.03	0.02	0.02
12	0.16	0.16	0.05	0.05	0.03	0.03
13	0.22	0.22	0.07	0.07	0.04	0.04
14	0.29	0.29	0.10	0.10	0.05	0.05
15	0.40	0.40	0.13	0.13	0.07	0.07
16	0.51	0.51	0.17	0.17	0.09	0.09
17	0.62	0.63	0.21	0.21	0.11	0.11
18	0.73	0.75	0.24	0.26	0.12	0.13
19	0.75	0.75	0.28	0.30	0.14	0.15
20	0.75	0.75	0.32	0.35	0.17	0.18
21	0.75	0.75	0.36	0.40	0.19	0.20
22	0.75	0.75	0.40	0.44	0.21	0.23
23	0.75	0.75	0.44	0.49	0.23	0.25
24	0.75	0.75	0.48	0.54	0.25	0.28
25	0.75	0.75	0.52	0.59	0.26	0.30
26	0.75	0.75	0.57	0.64	0.28	0.32
27	0.75	0.75	0.60	0.68	0.30	0.34
28	0.75	0.75	0.64	0.73	0.32	0.36
29	0.75	0.75	0.67	0.75	0.34	0.39
30	0.75	0.75	0.71	0.75	0.35	0.41
31	0.75	0.75	0.75	0.75	0.37	0.43
32	0.75	0.75	0.75	0.75	0.39	0.46
33	0.75	0.75	0.75	0.75	0.41	0.48
34	0.75	0.75	0.75	0.75	0.43	0.50
35	0.75	0.75	0.75	0.75	0.45	0.53
36	0.75	0.75	0.75	0.75	0.47	0.55
37	0.75	0.75	0.75	0.75	0.49	0.58
38	0.75	0.75	0.75	0.75	0.51	0.60
39	0.75	0.75	0.75	0.75	0.53	0.63
40	0.75	0.75	0.75	0.75	0.55	0.65
41	0.75	0.75	0.75	0.75	0.57	0.68
42	0.75	0.75	0.75	0.75	0.59	0.70
43	0.75	0.75	0.75	0.75	0.61	0.73
44	0.75	0.75	0.75	0.75	0.63	0.75
45	0.75	0.75	0.75	0.75	0.65	0.75
46	0.75	0.75	0.75	0.75	0.68	0.75
47	0.75	0.75	0.75	0.75	0.70	0.75
48	0.75	0.75	0.75	0.75	0.72	0.75
49	0.75	0.75	0.75	0.75	0.75	0.75

B. SOILS WITH HIGH HYDRAULIC CONDUCTIVITY

SEASONAL WATER TABLE (SWT) DEPTH	BRIEF SWT GPD/Sq. Ft.		MODERATE SWT GPD/Sq. Ft.		LONG SWT GPD/Sq. Ft.	
Inches	8 Ft. Centers	10 Ft. Centers	8 Ft. Centers	10 Ft. Centers	8 Ft. Centers	10 Ft. Centers
8	0.00	0.00	0.00	0.00	0.00	0.00
9	0.03	0.03	0.01	0.01	0.00	0.00
10	0.08	0.08	0.03	0.03	0.01	0.01
11	0.14	0.14	0.05	0.05	0.02	0.02
12	0.23	0.23	0.08	0.08	0.04	0.04
13	0.33	0.34	0.11	0.11	0.05	0.06
14	0.42	0.46	0.14	0.15	0.07	0.07
15	0.54	0.60	0.18	0.20	0.09	0.10
16	0.66	0.75	0.23	0.24	0.11	0.12
17	0.79	0.90	0.27	0.29	0.13	0.15
18	0.91	1.05	0.30	0.35	0.15	0.17
19	1.04	1.21	0.35	0.40	0.17	0.20
20	1.17	1.25	0.39	0.46	0.20	0.22
21	1.25	1.25	0.44	0.51	0.22	0.25
22	1.25	1.25	0.48	0.56	0.25	0.28
23	1.25	1.25	0.53	0.62	0.27	0.31
24	1.25	1.25	0.58	0.68	0.30	0.34
25	1.25	1.25	0.62	0.74	0.31	0.37
26	1.25	1.25	0.67	0.80	0.34	0.40
27	1.25	1.25	0.72	0.85	0.36	0.43
28	1.25	1.25	0.76	0.91	0.38	0.45
29	1.25	1.25	0.81	0.96	.040	0.48
30	1.25	1.25	0.85	1.02	0.43	0.51
31	1.25	1.25	0.90	1.08	0.45	0.54
32	1.25	1.25	0.95	1.14	0.47	0.57
33	1.25	1.25	1.00	1.20	0.50	0.60
34	1.25	1.25	1.05	1.25	0.52	0.63
35	1.25	1.25	1.10	1.25	0.55	0.66
36	1.25	1.25	1.15	1.25	0.57	0.69
37	1.25	1.25	1.20	1.25	0.60	0.73
38	1.25	1.25	1.25	1.25	0.63	0.76
39	1.25	1.25	1.25	1.25	0.65	0.79
40	1.25	1.25	1.25	1.25	0.68	0.83
41	1.25	1.25	1.25	1.25	0.71	0.86
42	1.25	1.25	1.25	1.25	0.74	0.90
43	1.25	1.25	1.25	1.25	0.76	0.93
44	1.25	1.25	1.25	1.25	0.79	0.97
45	1.25	1.25	1.25	1.25	0.82	1.01
46	1.25	1.25	1.25	1.25	0.85	1.04
47	1.25	1.25	1.25	1.25	0.88	1.08
48	1.25	1.25	1.25	1.25	0.91	1.12
49	1.25	1.25	1.25	1.25	0.95	1.16
50	1.25	1.25	1.25	1.25	0.98	1.20
51	1.25	1.25	1.25	1.25	1.01	1.24
52	1.25	1.25	1.25	1.25	1.04	1.25
53	1.25	1.25	1.25	1.25	1.08	1.25
54	1.25	1.25	1.25	1.25	1.11	1.25
55	1.25	1.25	1.25	1.25	1.14	1.25
56	1.25	1.25	1.25	1.25	1.18	1.25
57	1.25	1.25	1.25	1.25	1.21	1.25
58	1.25	1.25	1.25	1.25	1.25	1.25

C. SOILS WITH LOW HYDRAULIC CONDUCTIVITY

SEASONAL WATER TABLE (SWT) DEPTH	BRIEF SWT GPD/Sq. Ft.		MODERATE SWT GPD/Sq. Ft.		LONG SWT GPD/Sq. Ft.	
Inches	8 Ft. Centers	10 Ft. Centers	8 Ft. Centers	10 Ft. Centers	8 Ft. Centers	10 Ft. Centers
8	0.00	0.00	0.00	0.00	0.00	0.00
9	0.02	0.02	0.01	0.01	0.00	0.00
10	0.05	0.05	0.02	0.02	0.01	0.01
11	0.08	0.08	0.03	0.03	0.01	0.01
12	0.12	0.12	0.04	0.04	0.02	0.02
13	0.16	0.16	0.05	0.05	0.03	0.03
14	0.21	0.21	0.07	0.07	0.03	0.03
15	0.28	0.28	0.09	0.09	0.05	0.05
16	0.30	0.30	0.12	0.12	0.06	0.06
17	0.30	0.30	0.15	0.15	0.07	0.07
18	0.30	0.30	0.18	0.18	0.09	0.09
19	0.30	0.30	0.21	0.21	0.10	0.10
20	0.30	0.30	0.24	0.24	0.12	0.12
21	0.30	0.30	0.27	0.27	0.14	0.14
22	0.30	0.30	0.30	0.30	0.15	0.15
23	0.30	0.30	0.30	0.30	0.17	0.17
24	0.30	0.30	0.30	0.30	0.19	0.19
25	0.30	0.30	0.30	0.30	0.21	0.21
26	0.30	0.30	0.30	0.30	0.23	0.23
27	0.30	0.30	0.30	0.30	0.24	0.25
28	0.30	0.30	0.30	0.30	0.26	0.27
29	0.30	0.30	0.30	0.30	0.27	0.29
30	0.30	0.30	0.30	0.30	0.29	0.30
31	0.30	0.30	0.30	0.30	0.30	0.30
32	0.30	0.30	0.30	0.30	0.30	0.30
33	0.30	0.30	0.30	0.30	0.30	0.30
34	0.30	0.30	0.30	0.30	0.30	0.30
35	0.30	0.30	0.30	0.30	0.30	0.30
36	0.30	0.30	0.30	0.30	0.30	0.30
37	0.30	0.30	0.30	0.30	0.30	0.30
38	0.30	0.30	0.30	0.30	0.30	0.30
39	0.30	0.30	0.30	0.30	0.30	0.30
40	0.30	0.30	0.30	0.30	0.30	0.30
41	0.30	0.30	0.30	0.30	0.30	0.30
42	0.30	0.30	0.30	0.30	0.30	0.30
43	0.30	0.30	0.30	0.30	0.30	0.30
44	0.30	0.30	0.30	0.30	0.30	0.30
45	0.30	0.30	0.30	0.30	0.30	0.30
46	0.30	0.30	0.30	0.30	0.30	0.30
47	0.30	0.30	0.30	0.30	0.30	0.30
48	0.30	0.30	0.30	0.30	0.30	0.30
49	0.30	0.30	0.30	0.30	0.30	0.30
50	0.30	0.30	0.30	0.30	0.30	0.30
51	0.30	0.30	0.30	0.30	0.30	0.30
52	0.30	0.30	0.30	0.30	0.30	0.30
53	0.30	0.30	0.30	0.30	0.30	0.30
54	0.30	0.30	0.30	0.30	0.30	0.30
55	0.30	0.30	0.30	0.30	0.30	0.30
56	0.30	0.30	0.30	0.30	0.30	0.30
57	0.30	0.30	0.30	0.30	0.30	0.30
58	0.30	0.30	0.30	0.30	0.30	0.30

Appendix B

QUANTITIES OF WASTEWATER FLOW FOR VARIOUS TYPES OF ESTABLISHMENTS

ESTABLISHMENT TYPE	GALLONS PER DAY
Airports, Bus Terminals, Train Stations	
Per passenger	5
Add per employee per 8-hour shift	20
Barber & Beauty Shops (*per chair*)	100
Bowling Alleys	
Toilet wastes per lane	100
For food service, add Food Service usage below	
Camps	
Campground with central comfort stations per camper	35
Day camps (no meals served) per camper	15
w/ food service, add Food Service usage below	
Churches	
Per seat/no food service	5
For food service, add Food Service usage below	
For daycares, add school usage below	
Grocery Stores	
Per 100 square feet of floor space	5
Add per 100 square feet of deli floor space	50
Add per 100 square feet of bakery floor space	50
Add per 100 square feet of meat market floor space	100
Country Clubs	
Per resident member (see Food Service usage below)	25
Per non-resident member	10
Dentists Offices	
Per practitioner	200
Add per employee per 8-hour shift	20
Doctors Office	
Per practitioner	200
Add per employee per 8-hour shift	20
Factories (*exclusive of industrial waste*)	
Gallons per employee per 8-hour shift	
No showers provided	20
Showers provided	35
Hospitals	
Per bed space	200
For food service excluding patients, add ~~restaurant~~ Food Service usage below	
Hotels & Motels	
Regular per room	150
Resort hotels & cottages	75
Add for establishments with self-service laundry facility per machine	750

Mobile Home Parks	
per single wide mobile home space	300
per double wide mobile home space	450
Nursing Homes, Rest Homes, Adult Congregate Living Facilities	
Per bed	100
Add for food service	65
Office Buildings (*per employee per 8-hour shift*)	15
Parks, Public Picnic	
Toilets only per person	5
With bath house, showers, & toilets per person	10
Recreation Vehicle Park	
Recreational vehicle space for overnight stay, without water & sewer hookup per vehicle space	50
Recreational vehicle space for overnight stay, With water & without sewer hookup per vehicle space	75
Recreational vehicle space for overnight stay, with water & sewer hookup per vehicle space	125
Food Service	
Per day per seat	40
Using single service articles only per seat	25
Bar and cocktail lounge per seat	30
Carry out only	
Per meal served without public restrooms	5
Per meal served with public restrooms	10
Add per employee per 8-hour shift	15
Residences	
Single or multiple family per dwelling unit	
1 bedroom	150
2 bedrooms	270
3 bedrooms	370
4 bedrooms	450
For each additional bedroom add	50
Rooming houses per occupant space	75
Schools (*per student*)	
Day schools & day cares	15
Add for food service	5
Add for day school workers	20
Boarding schools	75
Service Stations & Convenience Stores	
Per vehicle served	10
(See Food Service)	
Stadiums, Race Tracks, Ball Parks (*per seat*)	5
Swimming Pools and Bathhouses (*per patron*)	10
Theaters (*per seat*)	
Indoor, movies/auditorium	5
Outdoor, Drive-Ins (*per space*)	10

FOOTNOTES:

The estimated flows for residential systems assume a maximum occupancy of 2 persons per bedroom. Where residential care facilities (non-institutional) will house more than 2 persons in any bedroom, estimated flows are to be increased by 75 gallons per each additional occupant.

Waste from food service operations is commercial in nature and may require special system sizing and treatment/disposal considerations. For food service operations, kitchen wastewater flows are normally to be calculated at 66% of the total wastewater flow.

Systems serving high volume establishments, such as fast food restaurants, convenience stores, and service stations require special sizing consideration due to above average wastewater volume expected from restroom facilities.

Residential Strength Wastewater as the primary sewage effluent from a septic tank must not exceed the following parameters: Five-Day Biochemical Oxygen Demand (BOD_5) of 300 mg/L; Total Suspended Solids (TSS) of 300 mg/L; and Fats, Oil and Grease of 25 mg/L. Other contaminants may also be present in the wastewater; however, they shall not exceed the concentrations or quantities normally found in residential sewage.

Appendix C

MINIMUM CAPACITY OF SEPTIC TANKS

LIQUID CAPACITY OF TANK (GALLONS)

NUMBER OF BEDROOMS	RESIDENTIAL
1, 2, and 3	1000
4	1250

Note: For each additional bedroom add 250 gallons.

COMMERCIAL: Capacity-greater than or equal to a minimum 48-hour flow or in no case not less than 1000-gallon tank

Appendix D

Requirements for the Approval
of Residential Aerobic Treatment Units for Distribution in Arkansas.

Aerobic Treatment Units may be used for treating domestic wastewater waste, provided that each unit is installed, operated and maintained in conformance with the following provisions:

1. Aerobic treatment systems designed to treat up to 2,000 gallons of wastewater waste per day shall be tested and listed by an American National Standards Institute (ANSI) certified third party previously approved by the Department. Aerobic treatment units shall be in compliance with the standards for Class I systems as defined by the ANSI/NSF Standard Number 40 (revised 2005).

2. The following additional requirements shall also apply to the construction, design, and operation of aerobic treatment units treating 2,000 gallons per day or less:

    a. A visual and audio warning device shall be installed in a conspicuous location so that activation of the warning device will alert property occupants of aerobic unit malfunction or failure. The wiring device shall be wired separately from the ATU so that disconnecting the ATU from the electrical supply will activate the alarm.

    b. Each unit shall be designed or equipped so that regardless of unusual patterns or frequencies of wastewater flow into the system effluent discharged will be in compliance with Class I effluent quality standards as defined by the General NPDES Permit ARG550000, Discharges from Individual Home Treatment Facilities.

    c. The minimum required treatment capacities for systems serving any structure, building or group of buildings; shall be based on estimated daily wastewater flows as determined by the Rules and Regulations Pertaining to Onsite Wastewater Systems.

Appendix E

Requirements for becoming an Aerobic Treatment Unit Distributor

The following items are required to become a distributor of aerobic treatment units used for domestic wastewater treatment. Application is made to the Department:

1. A current septic tank installer's license, septic tank manufacturer's license, or a Designated Representative's license.

2. Factory trained installation and service personnel capable of providing service within 48 hours. Service personnel must also be currently licensed by the Department as a Certified Monitoring Person.

3. A statement from the Corporate Office stating that in the event of the local franchise going out of business, the service contracts in Arkansas will be honored and renewed by another franchise in an adjoining state or region of Arkansas.

4. Provide orientation seminars to Certified Monitoring Personnel and provide parts and seminars to installers certified to repair aerobic treatment units.

Appendix F

Requirements for Submission of an Onsite Wastewater System Permit Application

1. All items will be submitted in triplicate to the local health unit with the permit fee.

2. Completed Onsite Wastewater System Permit Application Form.

3. Vicinity Map.

4. The drawing to be to scale using either 1 inch = 20 feet or 1 inch = 30 feet. The drawing shall indicate the house, Onsite wastewater system components, and other features affecting the location of primary and secondary absorption areas.

5. The direction of North shall be indicated.

6. Property lines shall be defined and their dimensions shown. Dimensions that cannot be indicated by scale shall be designated by a shown distance between 2 indicated points. The distance to 2 adjacent property lines shall be shown to tie the system to one location on the lot.

7. Onsite wastewater system setbacks and their distances ~~must~~ shall be shown. Structures and their dimensions and all features, which affect the locations of system setbacks including the location of utility/service lines, shall be shown.

8. The driveway and parking area dimensions ~~must~~ shall be shown.

9. The location and elevation of the water well shall be shown along with their distance from all parts of the onsite wastewater system and secondary absorption area. For public water systems, show the distances from the onsite wastewater system's components and secondary absorption area location to the water mains and the water service lines.

10. The location, elevation and distances of all wells and/or onsite wastewater systems on adjoining properties that are within 100 feet of the proposed septic system and secondary absorption area shall be shown.

11. Locate and properly size the primary and secondary absorption area and include contour lines or arrows indicating the direction and degree of the lot's slope shall be shown.

12. A benchmark shall be designated and elevation shots or rod readings shall be shown for all parts of the wastewater system. Ground elevation and flow-line elevations shall be provided for all system components. This includes the stub-out and the beginning, middle and end of each absorption trench. Each absorption trench shall be designed on contour, not to exceed 2 inches difference in elevation from beginning to end.

13. The tank sizes and locations shall be indicated.

14. Unusual soils or topographies that affect the site shall be shown and identified. Examples include: excavations, ponds, streams, rock outcrops, drainages, government take lines, etc.

15. The location of percolation test holes on the property shall be shown. All percolation test holes used in determining the absorption area size shall be within the primary absorption area location.

16. The location of all soil pits on the property shall be shown.

17. The flow line elevation of the building sewer stub-out shall be indicated on the plans. The flow line elevations of all tank inlets and outlets shall be provided. The flow line elevation of the distribution box or other device inlet and outlet shall be provided. The elevation of each trench bottom shall be provided.

18. The location of the cleanout(s) shall be shown.

19. Pipe specifications for all parts of the system shall be provided.

20. The absorption trench depth-shall be indicated.

21. The absorption trench media/product shall be indicated.

22. Soil information including hydraulic conductivity, redoximorphic features and depth to bedrock found in the primary and secondary absorption areas from the soil pit shall be provided.

23. Pumped effluent systems
    a. All pertinent data required for conventional system shall be provided.
    b. Indicate the calculated dose volume.
    c. Provide the construction details on the dose tank.
    d. Indicate the length and diameter of the pumped effluent line.
    e. Indicate the length and diameter of the pipe from dose chamber to the distribution system.
    f. Indicate the elevation difference between the inlet to the distribution system and pump's shut-off elevation.
    g. Provide the brand, model number and pump curve of effluent pump specified. Include the calculations used to determine the dose volume per minute and friction head.
    h. Provide details of the pump control assembly not limited to floats, alarm or control panels, electrical wiring

24. Indicate the diversion device to be used and its location.

25. Systems included in the Onsite Monitoring Program shall be submitted with a valid contract with a Certified Monitoring Provider.

Designated Representative Responsibilities in Application Submittal

The Designated Representative submits a completed Individual Onsite Wastewater System Permit Application (EHP-19) along with detailed plans, product specifications, and required fees. This application package is submitted to the appropriate local health unit.

The following information shall be provided on the Individual Onsite Wastewater System Permit Application (EHP-19). The requirements for each item are explained below. Print or type the information required.

The type of application being requested is indicated by checking the appropriate box in the upper left corner of the EHP-19. The permit choices are:

√ NEW INSTALLATION – Any individual onsite wastewater system that has not been permitted.

√ ALTERATION/REPAIR

Alteration - Any change or extension to an existing, permitted system.

Repair - The restoration of a malfunctioning existing, permitted system to proper function.

The fee amount is calculated from the chart in the upper right corner of the EHP-19 and marked with a check in the appropriate box.

In the first block of Part I (Treatment Type), check the Treatment Type proposed. If the Treatment Type is not listed on the EHP-19, mark Other (OTH).

In the second block of Part I (Disposal Method), check the Disposal Method proposed. If the Disposal Method is not listed on the EHP-19, mark Other (OTH).

The information required for items 1-24 is explained by the item's number as found on the EHP-19, for information not applicable use N/A:

1. The name of the owner/applicant. If the structure is a "spec house," the builder's name can be used, but the homeowner's name should be added prior to the final inspection.

2. The telephone number of the person listed in item 1. This is required in the event the Environmental Health Specialist needs to discuss an issue with the property owner.

3. The mailing address of the applicant.

4. The county in which the proposed system is located.

5. The address of the proposed system. If a 911 address is not available, simple and accurate directions are required.

6. The name of the subdivision where the system is located. If the proposed system site is not located in a subdivision, mark this space with N/A.

7. The date the subdivision in item 6 was approved by the Department of Health.

8. The date the subdivision in item 6 was recorded at the county courthouse. If the subdivision was not recorded, mark this space with "not recorded." If the subdivision was filed and recorded prior to July 1, 1977, the permit may be reviewed under either the current regulations or the applicable regulations. This must be addressed on the permit application. If not applicable, mark this space with N/A.

9. The subdivision lot number of the proposed system. If not applicable, mark this space with N/A.

10. The dimensions, in feet, of the property. These dimensions shall correspond to the dimensions shown on the plat drawing. The dimensions shall be entered. Do not use the notation "refer to the plat drawing".

11. The total area of the lot in acres.

12. For residential systems, list the total number of bedrooms. For non-residential systems, list the number of people using the system on a daily basis.

13. Indicate the estimated daily flow in gallons per day (GPD). For residential systems, the gallons per day per bedroom rates used to design the system ~~must~~ shall be stated. Non-residential systems are based on Appendix B, Quantities of Wastewater Flow for Various Types of Establishments, which can be found in the Rules and Regulations Pertaining to Individual Onsite Wastewater Systems.

14. Provide a brief legal description for the site of the proposed system. The legal description should be taken down to a minimum of two and one-half (2 ½) acres.

15. Indicate whether the site will be supplied water by either a public water system or a private well. If the water will be from a public system, list the name of the supplier.

16. Indicate the GPS coordinates (longitude and latitude) of the center of both the primary and secondary disposal sites or the point of discharge, whichever is appropriate.

17. Indicate the loading rates (Should be the same as found on Soil Criteria 22(h) Primary Area and 23(h) Secondary Area). If applicable, indicate the percolation rates for the Primary Area and the Secondary Area. The percolation rate for the secondary area shall not be used in finding the average percolation rate.

18. System Specifications: Record the size/dimensions of the proposed system's components.

a. Record the total liquid capacity, in gallons, of the septic tank(s) to be used.
b. Record the liquid capacity of the dose tank, in gallons, to be used. If no dose tank is required, mark N/A.
c. Record the size, in square feet, of the absorption area required.
d. Record the number of absorption trenches (field lines) to be used.
e. Record the length of the absorption trenches (field lines). If the absorption trenches are of different lengths, record all lengths used. Absorption trenches of different lengths are only allowed for serial distribution and pressure distribution designs. If more space is needed, use the comments section on page two.
f. Record the depth, in inches, at which the proposed absorption trenches trenches are to be installed.
g. Indicate the minimum absorption trench spacing, center to center, to be used.
Remarks. This space is provided for any additional information the Designated Representative deems pertinent.
h. Indicate the trench media options.
i. Indicate the trench width appropriate to the trench media options.

19. The signature of the applicant or use the EHP-19, OPT-A form and indicate in the signature space. "See EHP-19, OPT-A".

20. The information in this box must be either typed or printed, with the exception of the Designated Representative's signature.

21. The Environmental Health Specialist responsible for the system review completes this item.

22. Soil Criteria for the Primary Disposal Area. If percolation tests are used to design the system, items 22 (e-h) and 23 (e-h), are marked N/A.

a. Record the depth, in inches, to bedrock. For the definition of bedrock, refer to the Department of Health's Bedrock policy.
b. Record the depth, in inches, to the observed brief seasonal water table. List N/A, if a seasonal water table is not present.
c. Record the depth, in inches, to the observed moderate seasonal water table. List N/A, if a seasonal water table is not present.
d. Record the depth, in inches, to the observed long seasonal water table. List N/A, if a seasonal water table is not present.
e. Record the depth, in inches, to the adjusted moderate seasonal water table.
f. Record the depth, in inches, to the adjusted long seasonal water table.
g. Record the class and depth of the hydraulic conductivity used to design the system.
h. Record the loading rate, in gallons per square foot per day, used in the system design.

23. Soil Criteria for the Secondary Disposal Area.

a. Record the depth, in inches, to bedrock. For the definition of bedrock, refer to the Department of Health's Bedrock policy.
b. Record the depth, in inches, to the observed brief seasonal water table. List N/A, if a seasonal water table is not present.
c. Record the depth, in inches, to the observed moderate seasonal water table. List N/A, if a seasonal water table is not present.
d. Record the depth, in inches, to the observed long seasonal water table. List N/A, if a seasonal water table is not present.
e. Record the depth, in inches, to the adjusted moderate seasonal water table.
f. Record the depth, in inches, to the adjusted long seasonal water table.
g. Record the class and depth of the hydraulic conductivity used to design the system.
h. Record the loading rate, in gallons per square foot per day, used in the system design.

24. If present, indicate the seasonal water table. Should be the same as items 22 (b, c, d) and 23 (b, c, d). List the Redoximorphic Features and/or Clay Content Restrictions (Refer to Section 8, in the Rules and Regulations Pertaining to Onsite Wastewater Systems, for wording). List N/A, if a seasonal water table is not present.

Comments: Use as needed for additional system information.

Part 2 Installation Inspection: Completed and signed by the Environmental Health Specialist (EHS) responsible for the system review, or may be made by the Designated Representative (DR) at the approval of the Authorized Agent. If no final inspection has been conducted, the installer may complete the inspection information, but ~~must~~ shall sign and date in the System Installation Verification Section.

Part 3 Permit for Operation: Completed and signed by the Environmental Health Specialist (EHS) responsible for the system review.

Comments: Use as needed for additional system information.

Site Revalidation: Use as needed for site revalidation completed and signed by the EHS or DR. Attach additional sheets, if necessary.

These Items Shall Be on or Provided with the Plot Drawing

1. A Vicinity Map.

2. The drawing to be to scale using either 1 inch = 20 feet or 1 inch = 30 feet. The drawing shall indicate the house, all septic system components and all other features affecting the location of primary and secondary disposal locations.

3. The direction of North shall be indicated.

4. Property lines shall be defined and their dimensions shown. Dimensions which cannot be indicated by scale shall be designated by a shown distance between two indicated points. The distance to two adjacent property lines shall be shown to tie the system to one location on the lot.

5. Structures and their dimensions shall be shown. All features shall be shown which affect the locations of system setbacks, including the location of utility/service lines.

6. The driveway and parking area dimensions shall be shown.

7. The location and elevation of the water well and water supply line shall be shown, along with their distance from all parts of proposed septic system location and alternate disposal location. For public water systems, show the distances from the septic system's components and secondary disposal location to the water mains and the water service lines.

8. The location, elevation and distances of all wells and/or septic systems on adjoining properties that are within 100 feet of the proposed septic system and secondary area shall be shown.

9. All septic system setbacks and their distances shall be shown.

10. In the primary and secondary disposal site locations, contour lines or arrows indicating the direction and degree of the lot's slope shall be shown.

11. A benchmark shall be designated and elevation shots or rod readings shall be shown for all parts of the sewage system. Ground elevation and flow-line elevations shall be provided for all system components.

12. The septic tank size and location shall be indicated.

13. Unusual soils or topographies that affect the site shall be shown and identified. Examples include: excavations, ponds, streams, rock outcrops, drainages, government take lines, etc.

14. The location of all percolation test holes on the property shall be shown.

15. The location of all soil pits on the property shall be shown.

16. The flow line elevation of the building sewer stub-out shall be indicated on the plans. The flow line elevations of septic tank inlets and outlets shall be provided. The flow line elevation of the distribution box or other device shall be provided. The elevation of each trench bottom shall be provided.

17. The location of the cleanout(s) shall be shown.

18. Pipe specifications and lengths for all parts of the system shall be provided.

19. The primary absorption area shall be properly sized.

20. The absorption trench depth shall be indicated.

21. The secondary area shall be indicated and properly sized.

22. The soil determination, percolation test or soil pit in the secondary area shall be indicated.

23. Soil information in regards to redoximorphic features and bedrock found in the primary disposal site soil pit shall be provided.

24. Pumped effluent systems
    a. All pertinent data required for a conventional system ~~must~~ shall be provided. Indicate the calculated dose volume.
    b. Provide the dose tank size (item 18b on EHP-19) and the construction details,. If a pump vault is used, indicate the proper, increased septic tank size in item 18a and on the plat drawing.
    c. Provide details of the control panel, riser, and pump control assembly. Indicate whether the dose interval is controlled by timer or by demand. Specify what brand panel and control assembly are to be used.
    d. Calculate the draw down in the dose tank and the show calculations used. Examples are: “On-off” points, elevations inside tank alarms, etc.
    e. Provide the brand, model number and pump curve of effluent pump specified. Include the calculations used to determine the dose volume per minute and friction head.
    f. Indicate the length and diameter of the pumped effluent line.
    g. Indicate the length and diameter of the pipe from dose chamber to the distribution system.
    h. Indicate the elevation difference between the inlet to the distribution system and pump’s shut-off elevation.
    i. Provide details of the distribution system.

25. Indicate any diversion or distribution device to be used and its location.

26. Systems included in the Onsite Monitoring Program shall be submitted with a valid contract with a Certified Maintenance Provider.

Designated Representative Site Responsibilities

1. All major system components shall be staked-out with all stakes identified. Examples, include but not limited to, the stub-out, tank, distribution device, begining, middle and end of each lateral line.

2. The beginning, middle and end of all laterals shall be flagged in both the primary and secondary site. **Exception**: The secondary site shall have only the field corners flagged on grade provided the lot is 1.5 acres or larger in size.

3. The house/structure location shall be flagged.

4. All percolation test holes shall be flagged.

5. All soil pits shall be flagged.

6. The proposed system design shall be appropriate for the site: flat ground, pumped effluent, serial distribution, dual absorption field, distribution box, dosed, etc.

7. Note observations or other findings.

8. All wells on the property and adjacent properties within 100' of the proposed system shall be identified and flagged.

Appendix G

Drawings

Fig. 1

Maximum Storage on Level Ground

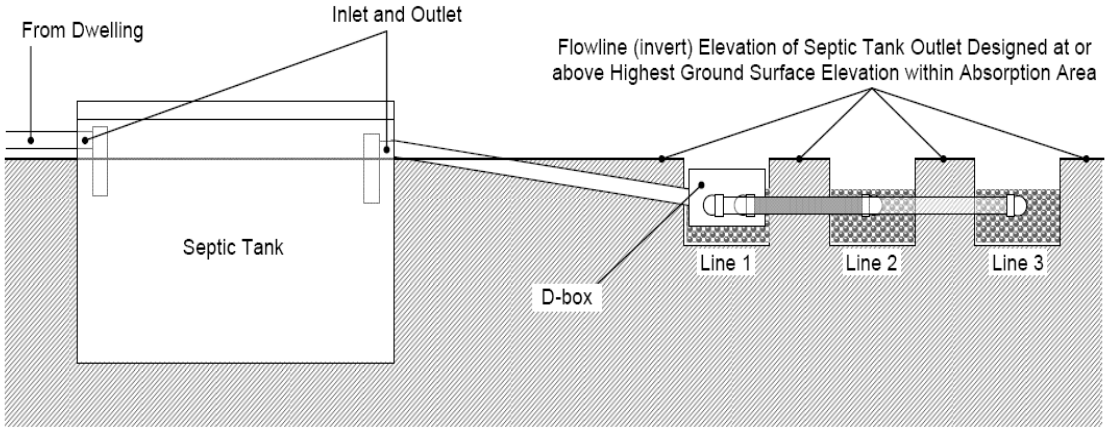

- The slope across the drain field starting from the first line to the last line is < 6 inches.
- The outlet flow line of the septic tank is at or above the highest ground elevation within absorption area.
- Distribution box height is not critical.

Fig. 2

Maximum Storage on Sloping Ground

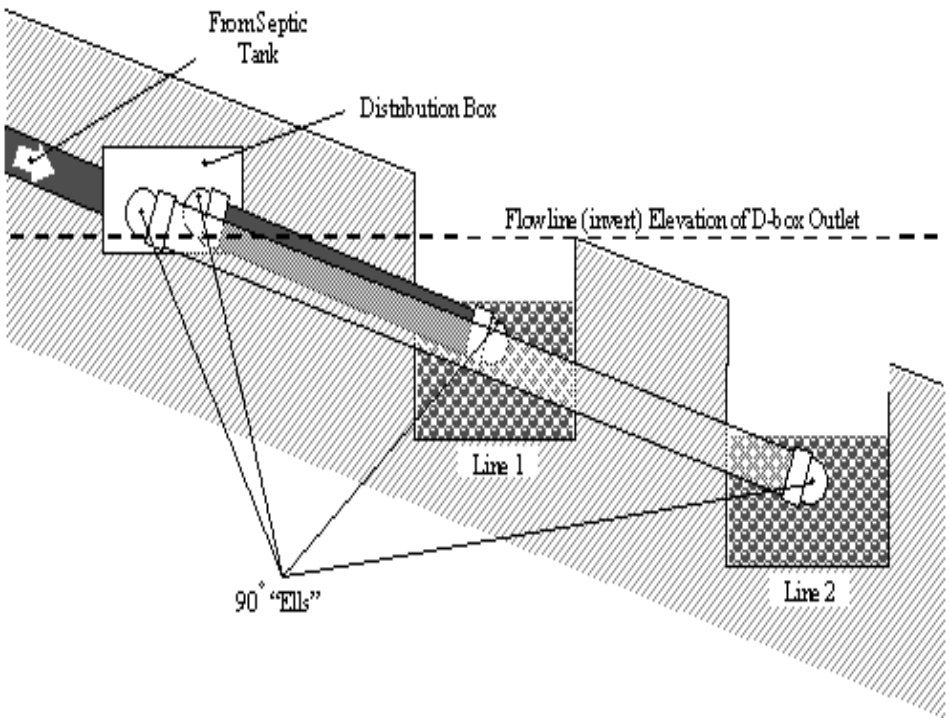

- Elevation change from the first line to last line is ≥ 6 inches.
- Outlet flow line of D-box is at or above the ground elevation of the highest line of the absorption area.

Fig. 3

Low Pressure Distribution Trench Detail

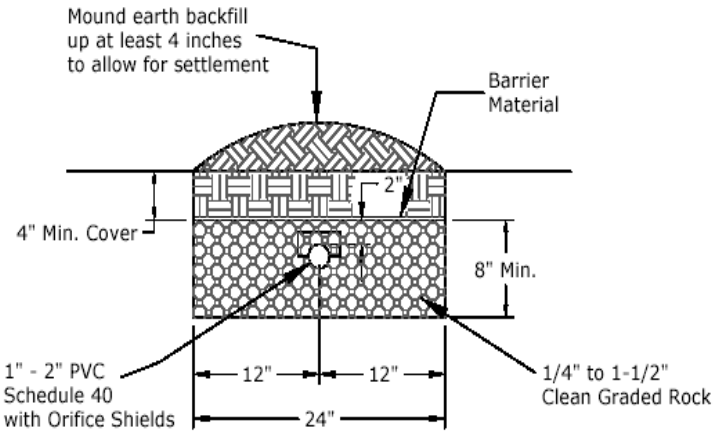

Fig. 4

Capping Fill System - Top View
(Less Than 6% Slope)

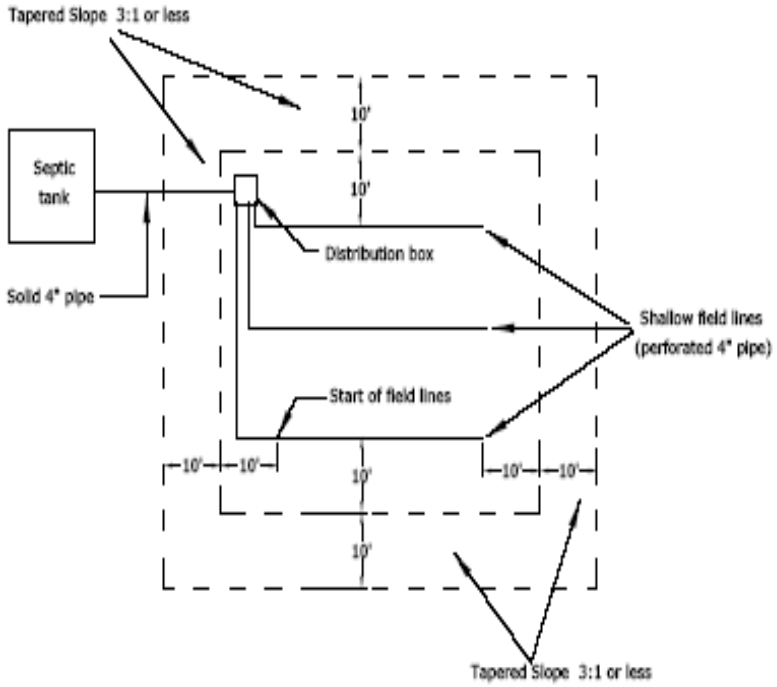

Figure 5

Capping Fill System - Side View (Less than 6% Slope)

Location of the distribution box or septic tank outlet determined by the fall across the absorption field. See Sections 9.11.5 and 9.11.6

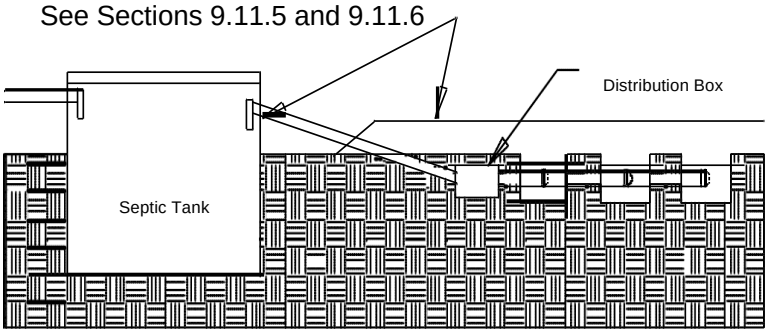

Note: Capping material must extend 10 ft. from trenches before the start of the slope. The tapered slope shall be 3:1 or less.

Fig. 6

Capping Fill System - Top View

(6% - 12% Slope)

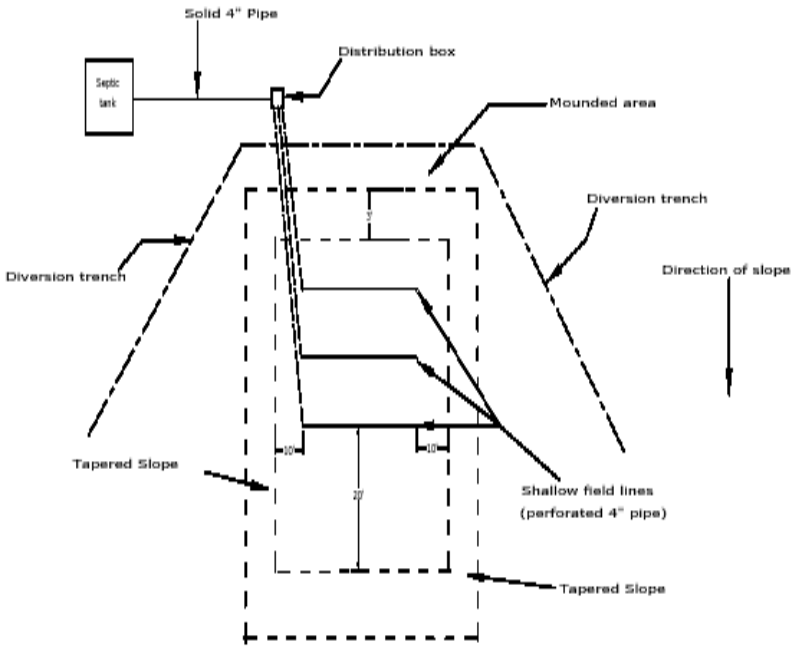

Fig. 7

Capping Fill System - Side View (6% - 12% Slope)

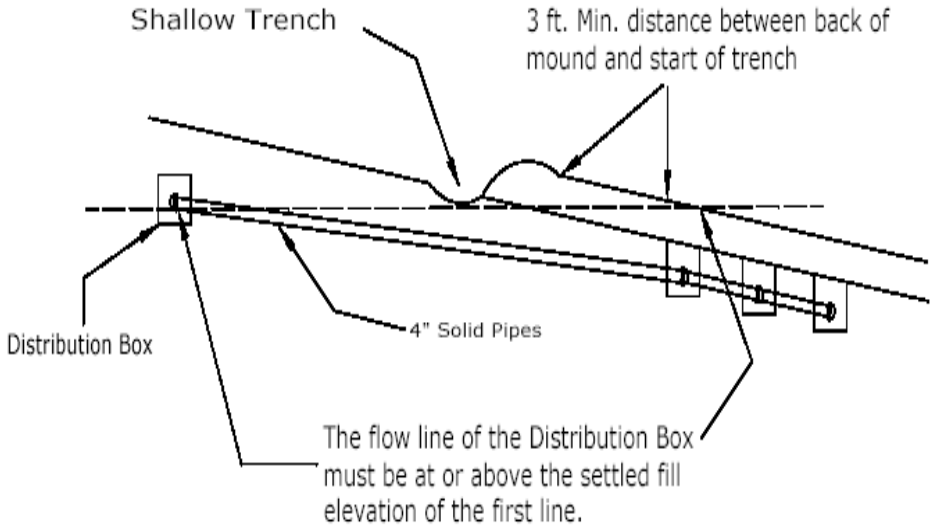

fig.8

Interceptor Drain
(3% or greater slope)

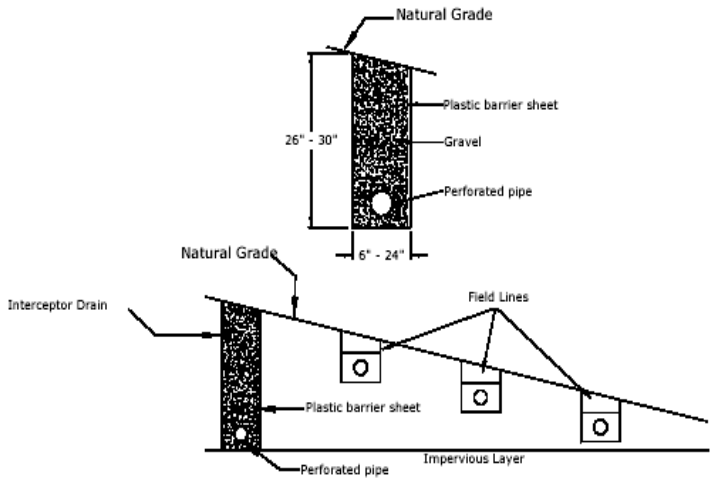

fig. 9

Lateral Line Trench Detail

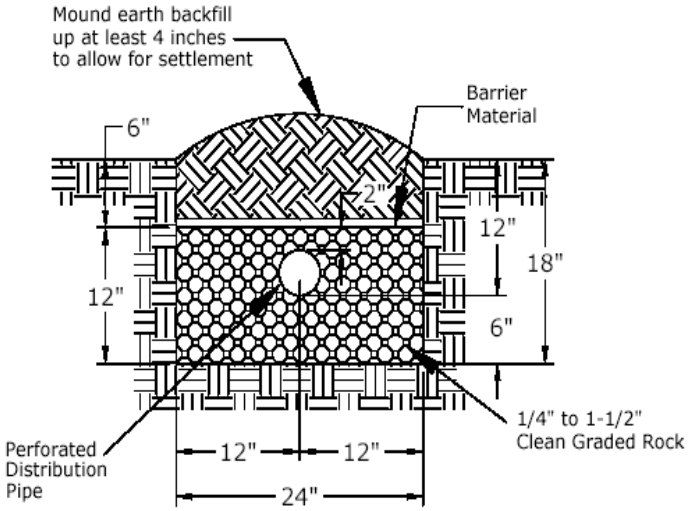

18" Trench Depth

fig. 10

Short Manifold LPD

(Top Down Loading Configuration)

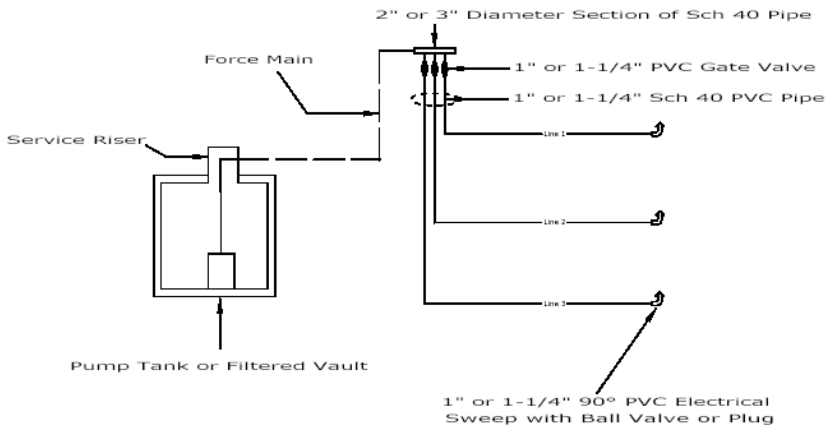

Figure 11
Grease Interceptor Design

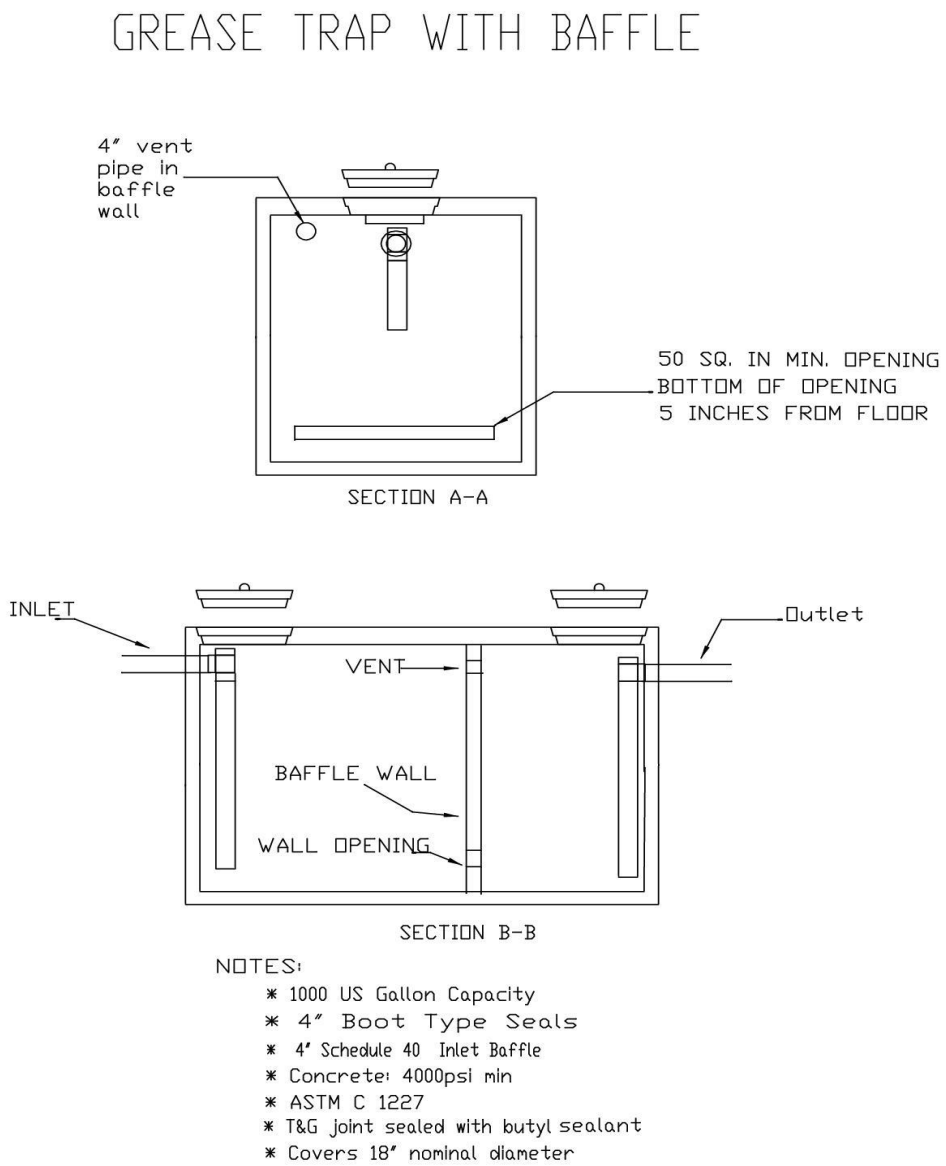

Appendix H

Soil Textural Triangle

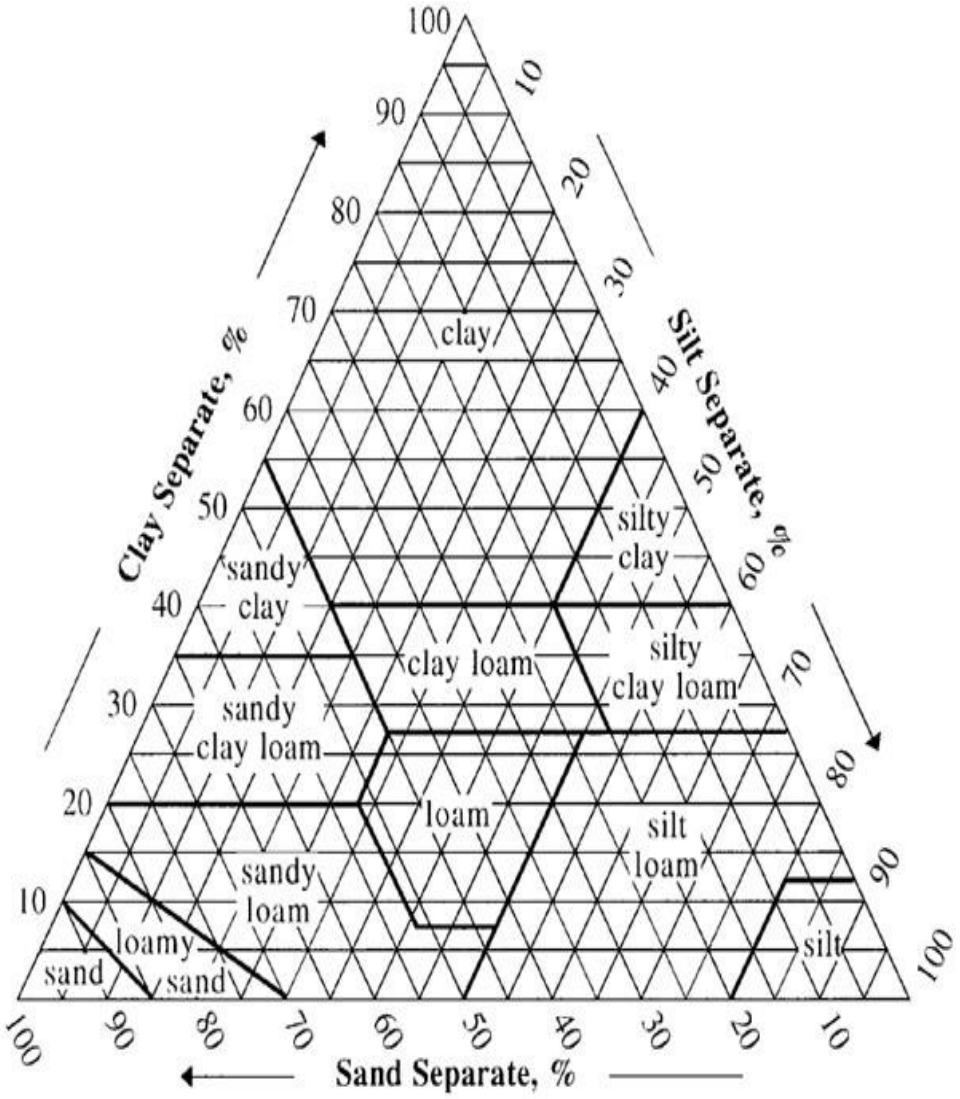

Appendix I

RED SOIL CHART

Only the following counties are to be exclusively considered as containing soils which may exhibit low shrink swell properties.

Baxter
Benton
Boone
Carroll
Fulton
Independence
Izard
Lawrence
Madison
Marion
Madison
Newton
Randolph
Searcy
Sharp
Stone
Washington

Appendix J

Conversion Table

1 millimeter	**=**	**0.03937 inches**
1 centimeter	**=**	**0.39370 inches**
1 meter	**=**	**39.37008 inches**
1 inch	**=**	**2.54 centimeters**
1 foot	**=**	**30.48 centimeters**
1 yard	**=**	**91.44 centimeters**
1 sq.centimeters	**=**	**0.15500 sq. inches**
1 sq. inch	**=**	**6.4516 sq. centimeters**
1 sq. foot	**=**	**929.0303 sq. centimeters**
1 cubic cm	**=**	**0.06102 cubic inches**
1 cubic meter	**=**	**35.31467 cubic feet**
1 cubic inch	**=**	**16.38706 cubic centimeters**
1 cubic foot	**=**	**0.02832 cubic meters**
1 cubic yard	**=**	**0.76455 cubic meters**
1 gram	**=**	**0.035274 ounces**
1 kilogram	**=**	**2.20462 pounds**
1 kilogram	**=**	**35.27396 ounces**
1 ounce	**=**	**28.34952 grams**
1 pound	**=**	**453.59237 grams**
1 milliliter	**=**	**0.033814 fluid ounces**
1 liter	**=**	**33.814022 fluid ounces**
1 fluid ounce	**=**	**29.57353 milliliters**
1 pint	**=**	**473.17648 milliliters**
1 gallon, liquid	**=**	**3.7854 liters**