Guidelines for Operating a Temporary Food Service

Arkansas
Department of Health

EHP-81 (5/13)

What is a temporary food establishment?
A Temporary Food Establishment (TFE) is a Retail Food Establishment that operates for a period less than or equal to Fourteen (14) consecutive days in conjunction with a single event or celebration.

Who needs to get a permit?
Each TFE in operation for profit during an event open to the public must obtain a permit from the Local Department of Health. Nonprofit organizations that sell food on a temporary basis for fund-raising events shall be exempt from payment of the permit fee but shall submit to inspection.

Why is it necessary to <u>obtain</u> a permit?
The Rules and Regulations pertaining to Retail Food Establishments require each food establishment have a valid permit issued by the Arkansas Department of Health. A valid permit must be conspicuously posted in every TFE. The TFE will be inspected and approved by the Local Environmental Health Specialist before a permit can be issued. The cost of a Temporary Food Service Permit is $5.00 per operational day.

Potentially Hazardous Food
Potentially hazardous food is any food that is natural or synthetic that requires temperature control because it is in a form capable of supporting the rapid and progressive growth of infectious or toxigenic microorganisms; the growth and production of *Clostridium botulinum;* or in raw shelled eggs, the growth of *Salmonella Enteritidis.*

Potentially hazardous foods include an animal food that is raw or heat treated; a food of plant origin that is heat-treated or consists of raw seed sprouts; cut melons; eggs, meat, poultry, fish, and dairy foods.

Non-Potentially Hazardous Food
Non-potentially hazardous food includes fruit pies; dry goods and cereals, un-constituted dehydrated foods and baked goods.

Other examples are cookies, breads, cakes, potato chips, popcorn, cotton candy, and candy bars.

Foodborne Illness

What is it?
Consuming contaminated foods or beverages causes Foodborne illness. Many different disease-causing microbes, or pathogens, as well as poisonous chemicals, can contaminate food. Common symptoms include diarrhea, abdominal cramping, fever, headache, vomiting, severe exhaustion, and sometimes bloody stools.

Who is at risk?
Everyone. An estimated 76 million cases of foodborne illness occur each year in the United States resulting in 325,000 hospitalizations and 5,000 deaths. Very young children, pregnant women, the elderly, and people with compromised immune systems are at the greatest risk.

Preventing Foodborne Illness
How can you prevent foodborne illness? Mishandling of food causes most foodborne illness. Inadequate cooking and holding temperatures allow pathogens to multiply. Poor sanitation and unsafe practices re-contaminate products. Over half of foodborne illnesses are due to improper food temperatures or poor personal hygiene. To prevent foodborne illness:

Practice the procedures outlined in this booklet.
Follow the four key steps to food safety:

1. **Clean** Wash hands and surfaces often
2. **Separate** Don't cross contaminate 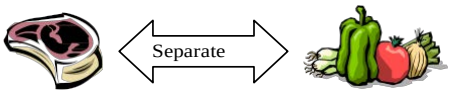

3. **Cook** Cook/reheat to proper temperatures
4. **Chill** Refrigerate promptly 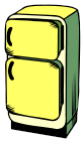

Recommendations for Reducing the Risks

1. **Avoid cooling & reheating foods**
   Use canned products, like chili or refried beans, instead of preparing from scratch, cooling, and reheating.
2. **Avoid hot holding of foods**
   Cook foods like tacos, burritos and shish kabob to order rather than cooking ahead of time and hot holding.
3. **Minimize preparation**
   Use store-bought coleslaw, potato, macaroni, or pasta salads instead of preparing them yourself.
4. **Do not touch ready-to-eat**
   Do not touch food with bare hands. Use utensils such as deli paper, spatulas, tongs, or single-use gloves.

Food Source

Home canned and home prepared foods, ice made at home, raw milk, or storage of prepared foods at private homes are **not allowed.**

Food Protection

Cover/protect foods on display. Do not allow customers to help themselves to open, unprotected containers.

Provide condiments, such as ketchup, mustard, coffee creamer, and sugar in dispensers, individual packets or squeeze or pump containers.

Food must be stored at a minimum of 6 inches off the floor/ground.

Protect foods from contamination and maintain at proper temperatures during transportation and storage.

Do not store food in water or un-drained ice.

Protect against insects by use of screens, fans, air curtains, or closeable service openings with minimal service area openings.

Use a scoop or an automatic dispenser to fill cups with ice. NEVER use a cup as an ice scoop.

Ice used as a medium for cooling exterior surfaces of food such as canned beverages may not consumed.

Food Temperatures
Potentially hazardous foods must be stored at temperatures below 41 ^{o} F (under refrigeration) or above 135 ^{o} F (hot holding) at all times, except when undergoing preparation or cooking. Do not store potentially hazardous food at room temperature. Food products found in the temperature danger zone are subject to embargo or destruction.

Thawing
Thaw foods under refrigeration at 41 ^{o} F or below; under cold running water (70 ^{o} F or less); or as part of the cooking process (in the microwave oven with immediate transfer to conventional cooking). **Do not thaw foods at room temperature.**

Thermometers
Shall be provided and accurate in all cold holding units. Thermometers shall be provided and accurate to verify proper cooking/reheating/holding temperatures of potentially hazardous food.

Cook/Reheat to proper temperature

1. Poultry, poultry stuffing, stuffed meats, stuffed pasta, & stuffing containing meats 165° F for a minimum of 15 seconds
2. Hamburgers, ground meat, eggs 158 ^{o} F minimum or hold for 15 seconds at 155 ^{o} F
3. Pork, fish 145 ^{o} F for a minimum of 15 seconds
4. Steak color change on all external surfaces and surface temperature 145 ^{o} F minimum
5. Roasts (beef, pork) hold for at a minimum of 145 ^{o} F for a minimum of 4 minutes
6. Hot dogs and other commercially processed ready-to-eat foods at 135 ^{o} F
7. Vegetables and/or fruits (if prepared) 135° F or below 41 ^{o}
8. Microwave cooking: Cover, rotate, stir midway, cook to165 ^{o} F, and hold 2 minutes.
9. Reheat food to 165 ^{o} F within 2 hours hold for 15 sec. at 165°F

Cooling
Separate hot foods into small portions. Use shallow pans, ice water baths, or cold stirring paddles.

Rapidly cool hot foods:
Cool within 2 hours - from 135° F to 70°F
Cool within 4 hours - from 70°F to 41°F

Food Service Workers

- Wear hair restraints and <u>clean</u> clothes
- No jewelry except plain ring (such as a wedding band)
- Wash hands frequently:
  - Before starting work
  - After smoking, eating, or drinking
  - After using the restroom
  - Before putting on gloves
  - After handling raw products
  - When contaminated
- Do not smoke, eat or chew gum while working
- Do not work if you are sick or have open sores or cuts on your hands or arms
- Do not touch ready-to-eat foods with bare hands
- Designate a Person-In-Charge (PIC), and be certain a PIC is present and knows food safety rules

Hand washing Facilities

A convenient hand washing facility shall be available for employee hand washing. This facility shall consist of at least warm water, soap and individual paper towels. Must be convenient and accessible.

As a minimum, the following shall be provided.

- Warm water
- Soap
- Individual paper towels
- Bucket to collect dirty water

For example, an air pump thermos or jug of warm water with a turn spout may be used to dispense warm water.

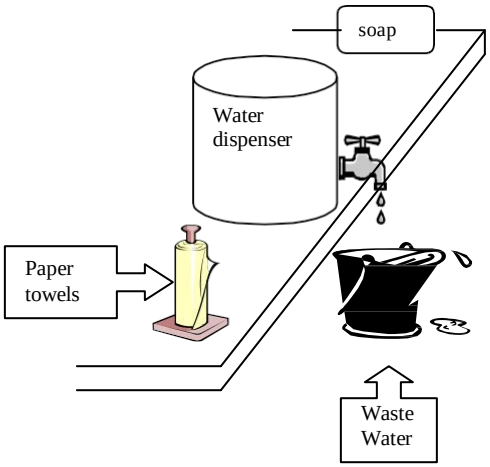

A gravity-flow hand wash station if a plumbed is not available.

Dishwashing Facilities

- Use clean, warm water
- Use a three-compartment sink or three clean containers:
  - Wash , Rinse, Sanitize
- Air Dry (do not towel dry)
- Use appropriate test strips, Chlorine sanitizer level 50-100 ppm.
- Ammonia based sanitizer level 200 ppm.

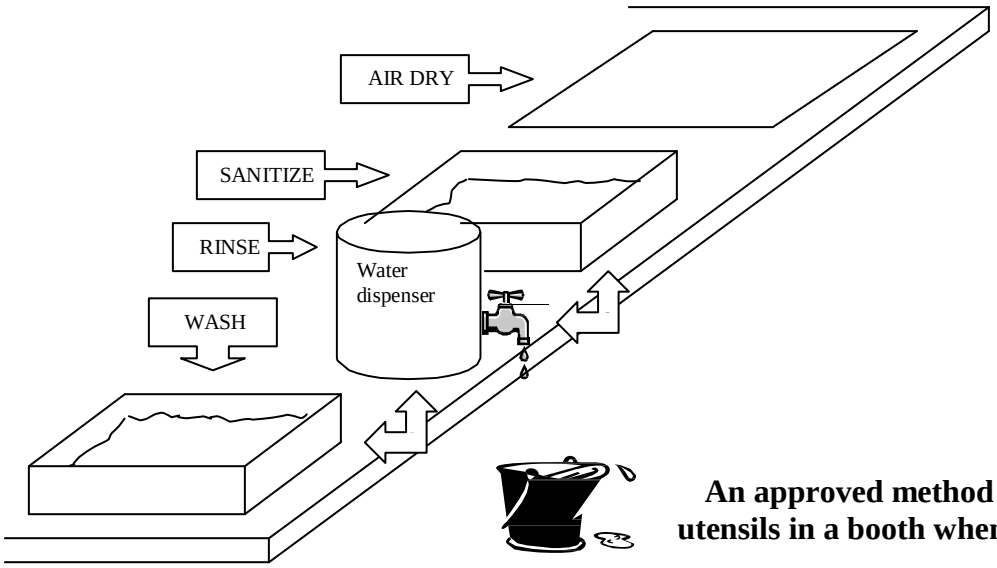

An approved method of washing preparation utensils in a booth when no plumbing is available

Wiping clothes

Rinse and store wiping cloths in a separate bucket of sanitizer

Store detergents and sanitizers separately from food and single service articles

Equipment, Utensils

- Smooth, easily cleanable, and in good repair
- Kept clean and sanitized
- For customer self-service, single service articles should be individually wrapped or in an approved dispenser
- Do not re-use aluminum foil pans, tin cans, bread wrappers, single service items

Store in-use serving utensils:

In the food with the handle above top of food and container
On clean portion of table, equipment. (Clean and sanitize utensils every 4 hours.)
In a running water dipper well for ice cream utensils

Temporary Food Establishment Construction

Locate concession away from sources of contamination such as animals, barns and petting zoos.
Covered structure required to protect from windblown dust and debris, weather, insects, and animals
Floors shall be surfaced with concrete, asphalt, or gravel or other materials that have been effectively treated to minimize dust, facilitate maintenance, and prevent muddy conditions.
Walls and ceilings shall be constructed of a material that protects the interior from the weather and windblown dust and debris.

Openings shall be protected against the entry of insects and rodents by:

- Screens (16 mesh to 1 inch)
- Properly designed and installed air curtains to control flying insects or other effective means

Provide adequate lighting and properly shield bulbs
Water: Enough potable water shall be available in the establishment for food preparation, cleaning, sanitizing utensils and equipment and hand washing. A heating facility capable of producing enough hot water for these purposes shall be provided on the premises.

An example of a basic approved temporary food service design.
NOTE: A rope or other barrier is required for the separation from the public if open preparation is done without solid walls.

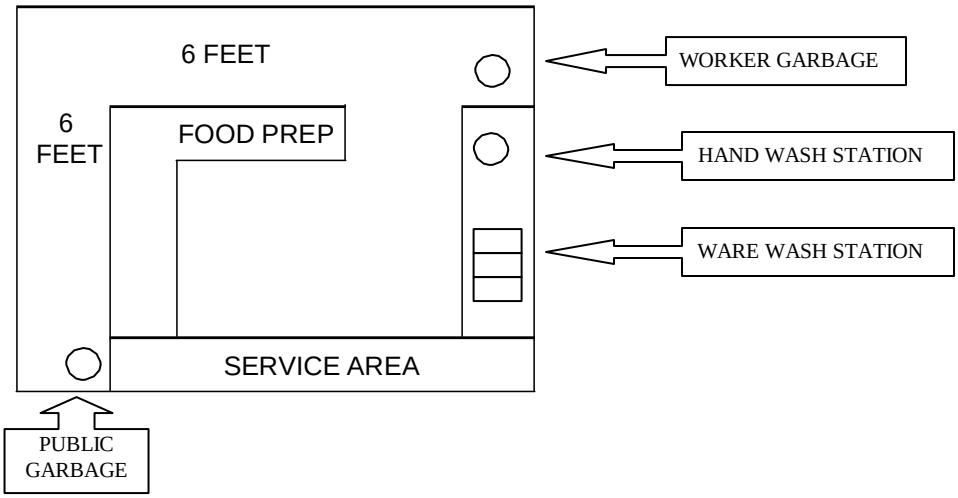

Waste Handling

Provide adequate number and size of durable, lined garbage containers for your needs
Dispose of solid waste appropriately
Discharge liquid waste into a sanitary sewer or collect in portable container and dispose of at approved location
Do not dump liquid waste into streets, storm drains, creeks, or onto the ground
Do not put discarded grease in the sanitary sewer. Allow to harden and place in garbage.

For Additional Food Safety Information: Arkansas Department of Health
Environmental Branch, Slot 46
4815 West Markham
Little Rock, Arkansas

www.healthyarkansas.com

Pre-Operational Temporary Food Service Checklist

Event:_____ Date:_____

Event Contact Person:_____

Name of Temporary Food Unit:_____

I as the food vendor have the following available and am ready to operate (any item checked NO will require correction prior to serving food).

	Yes	No	Comments
Facilities:			
Water from Approved Source (public water)			
Sewage disposed of in approved manner			
Solid waste handled and disposed in approved manner			
Hand Wash Sink located onsite in the food preparation area and accessible at all times			
Hot (100ºF) & Cold Water			
Soap			
Paper Towels			
Separate Sink with 3 compartments located onsite			
Sanitizer: ☐ Bleach/Chlorine ☐ Quaternary Ammonia			
Appropriate test strips available onsite			
Adequate on-site storage to maintain foods requiring refrigeration at 41ºF or below			
Adequate on-site facilities to cook/re-heat foods to required temperatures before serving.			
Adequate on-site facilities to maintain hot foods at 135ºF or above			
Construction:			
Walls and ceiling provide protection from entry of insects, weather, rodents, or other animals			
Overhead protection in place			
Walls: ☐ screens ☐ air curtain ☐ other effective means to prevent insects			
If screens are not provided are they available?			
Floors are all-weather and effective to control dust and mud			
Food Protection:			
Workers are wearing hair restraints and clean clothes			
Food on display/storage covered or protected			
Food stored a minimum of 6 inches off floor/ground			
Food not stored in water, in un-drained ice, or in contact with ice to be used as food or drinks.			

I certify that the above information is correct, _____,_____

(name) (date)